REGIE NATIONALE DES USINES

RENAULT

BILLANCOURT - FRANCE

"FERLEC"

ELECTROMAGNETIC CLUTCH

REPAIR INSTRUCTIONS

R. S. 2198 EA.

ILLUSTRATIONS

REPAIR INSTRUCTIONS

510 TYPE CLUTCH

THE "FERLEC", EH a 4 TYPE ELECTROMAGNETIC CLUTCH

PATENTS : S.A.F. FERODO

MODELS		CLUTCH REFERENCE MARKS		
		I		
R 1062	"Luxe" sedan	x		
-	Convertible (grand luxe)	x		
-	U.S.A.	x		

ILLUSTRATIONS

510 TYPE CLUTCH

Mark I

LIST OF ILLUSTRATIONS

On the plates showing the wiring diagrams, the following color code is used :

- *generator circuit : black*
- *battery circuit : green*
- *mechanical controls and linkages : red*
- *parts : black*

LIST OF ILLUSTRATIONS (continued)

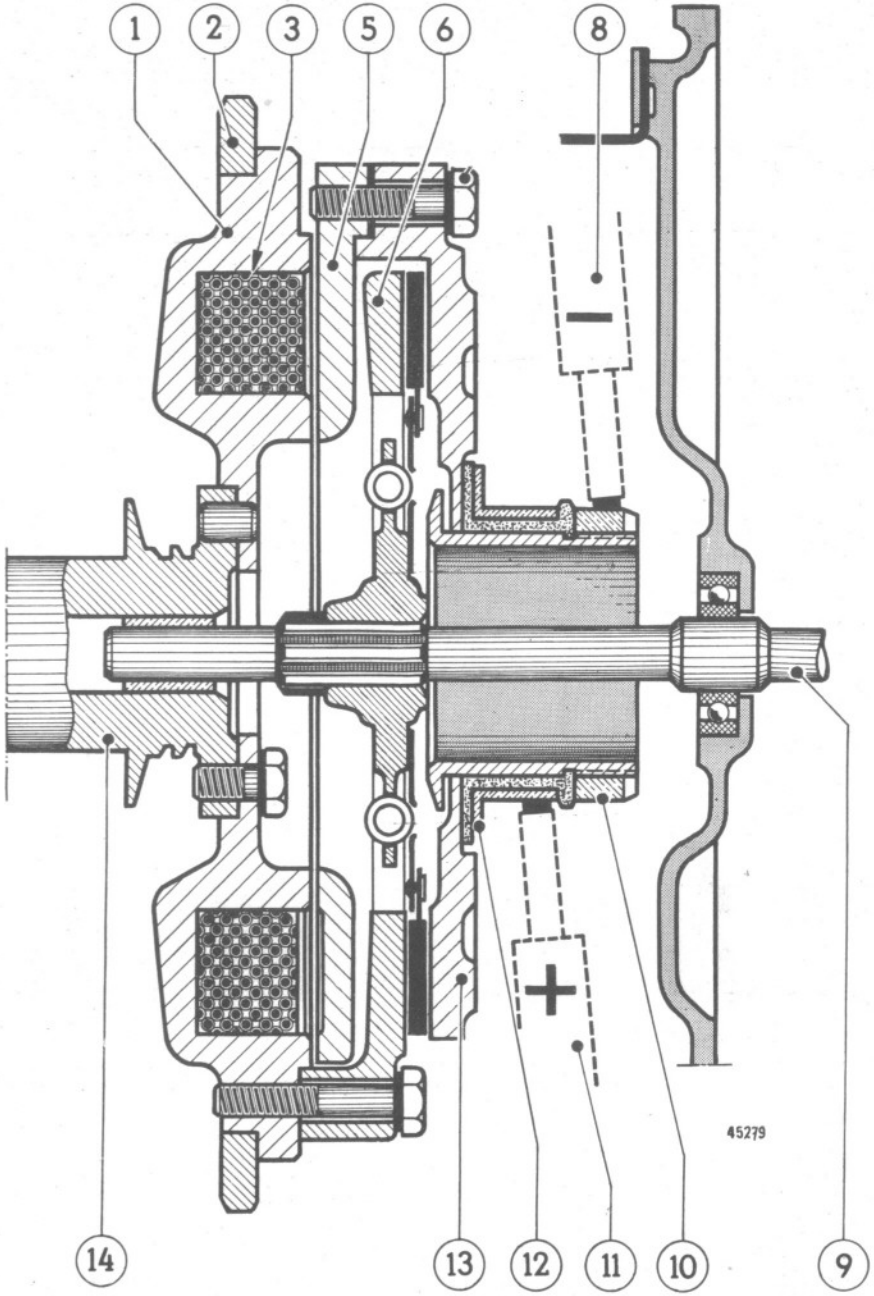

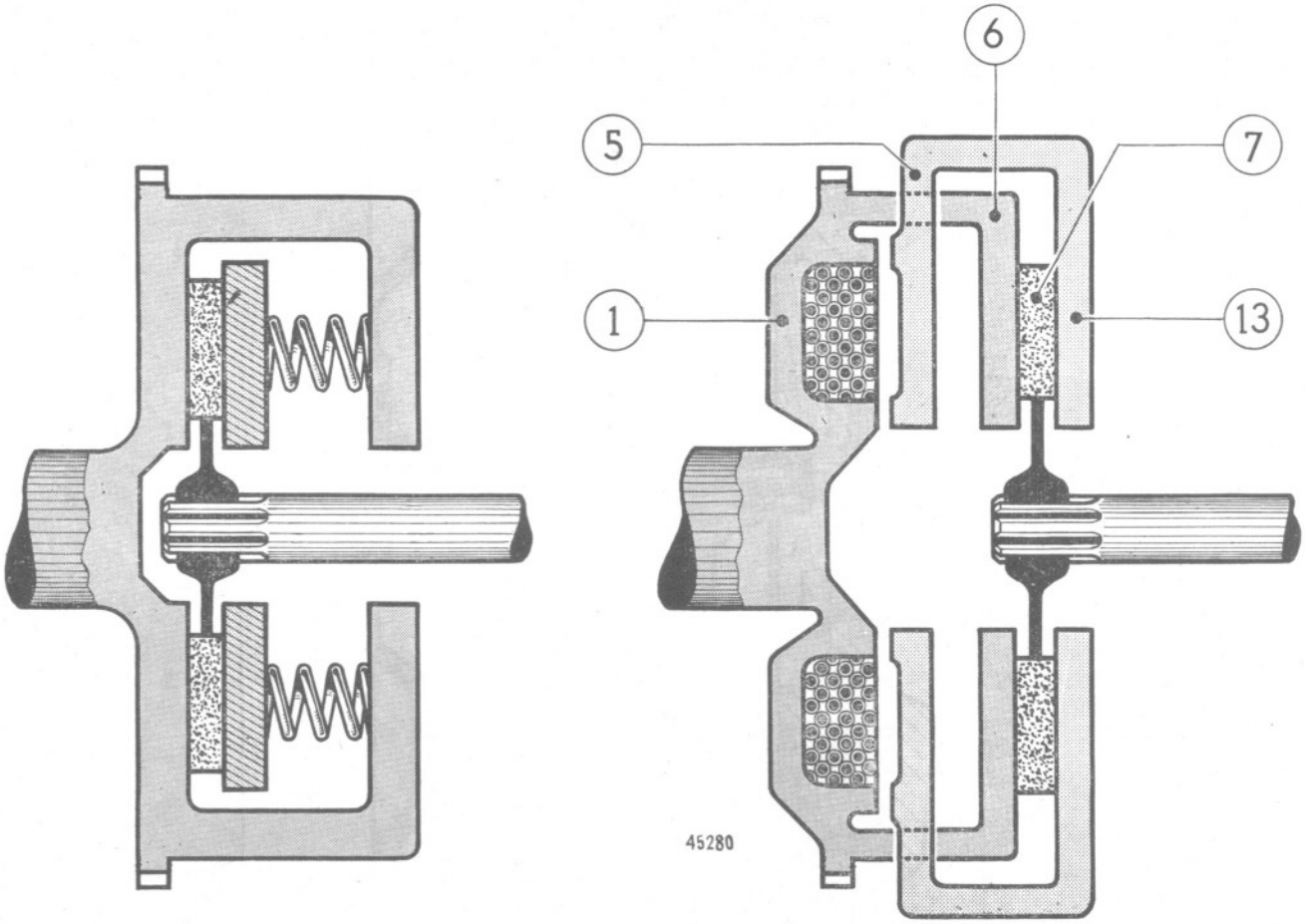

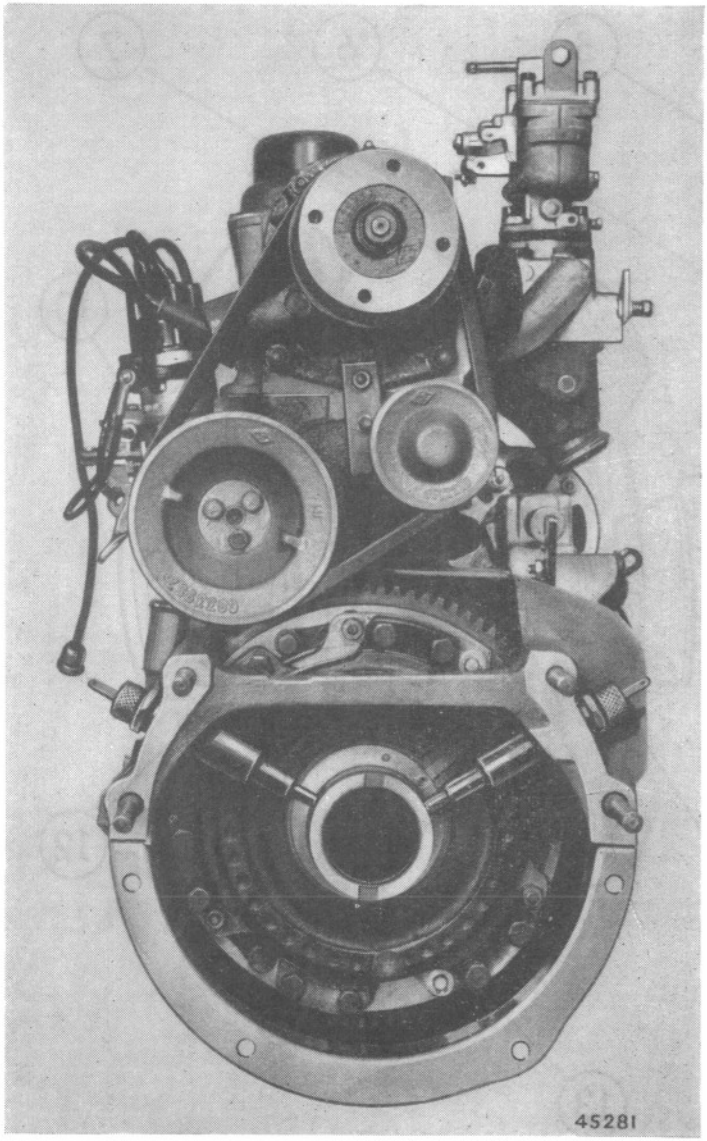

Fig. 1

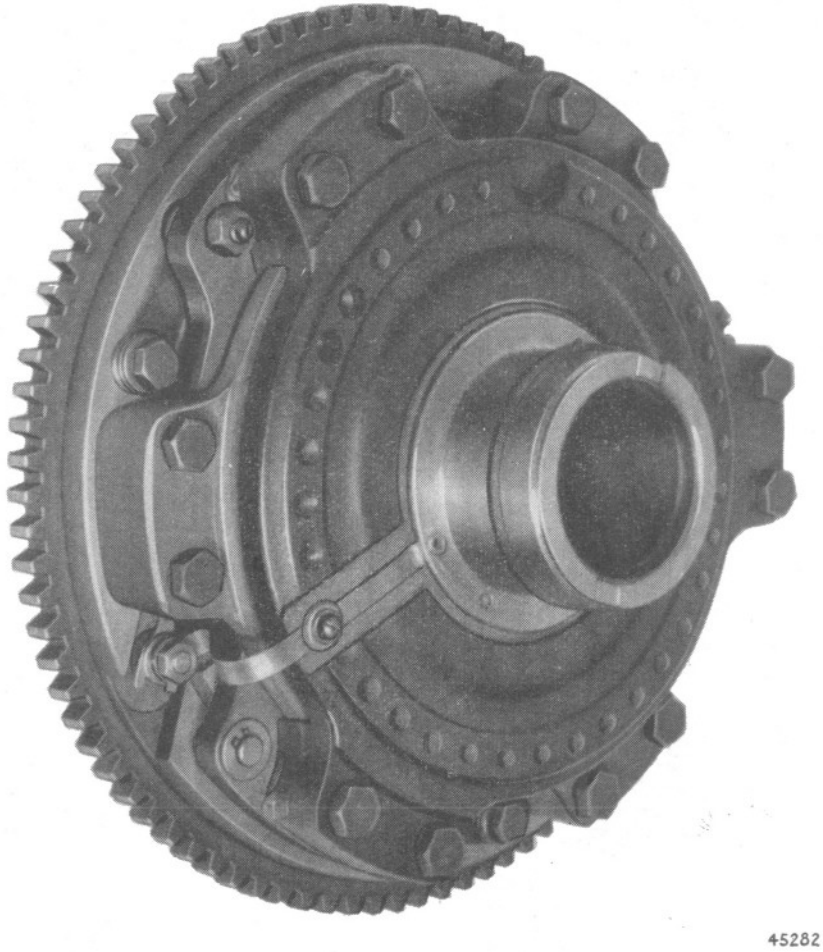

Fig. 2

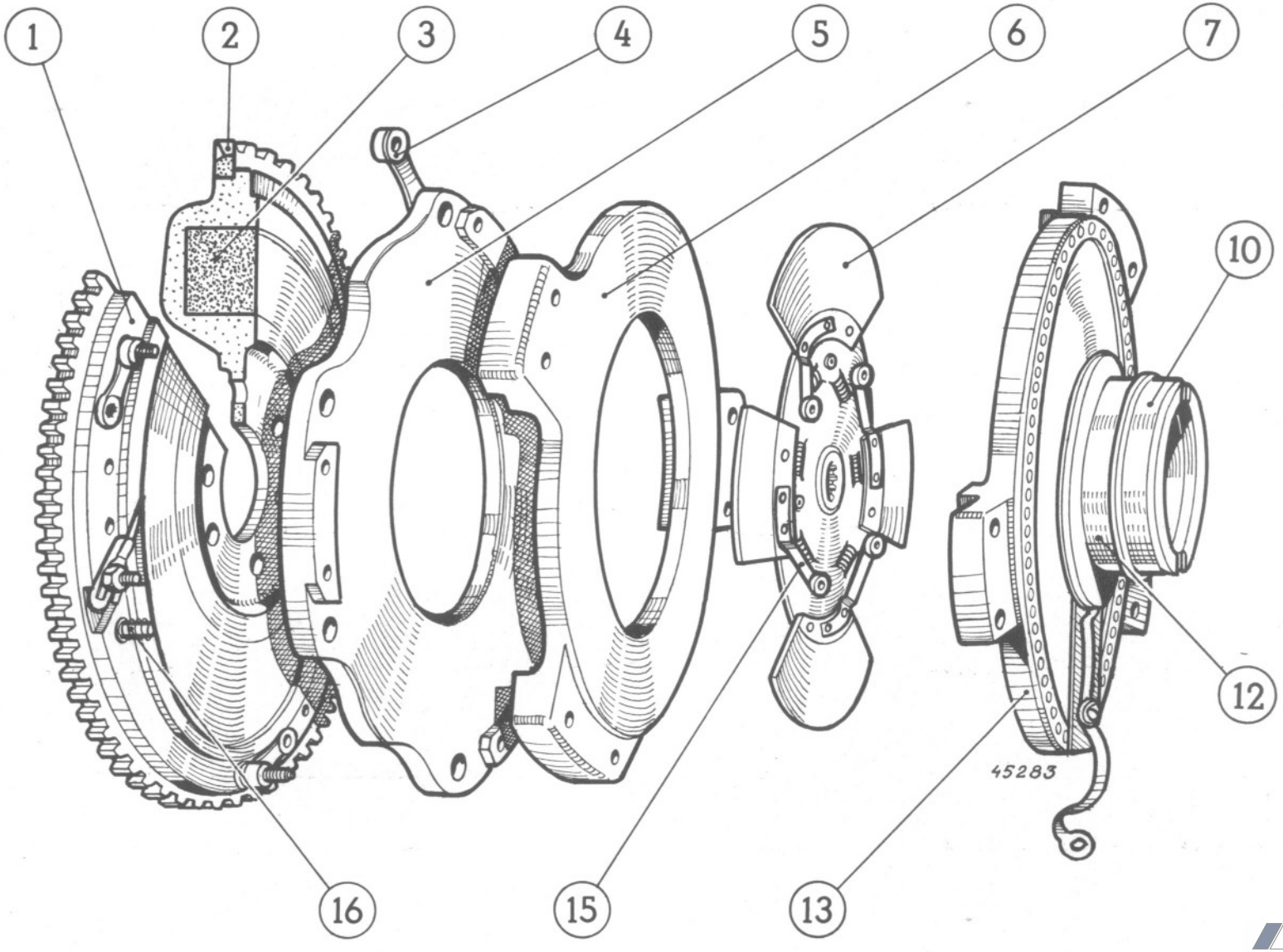

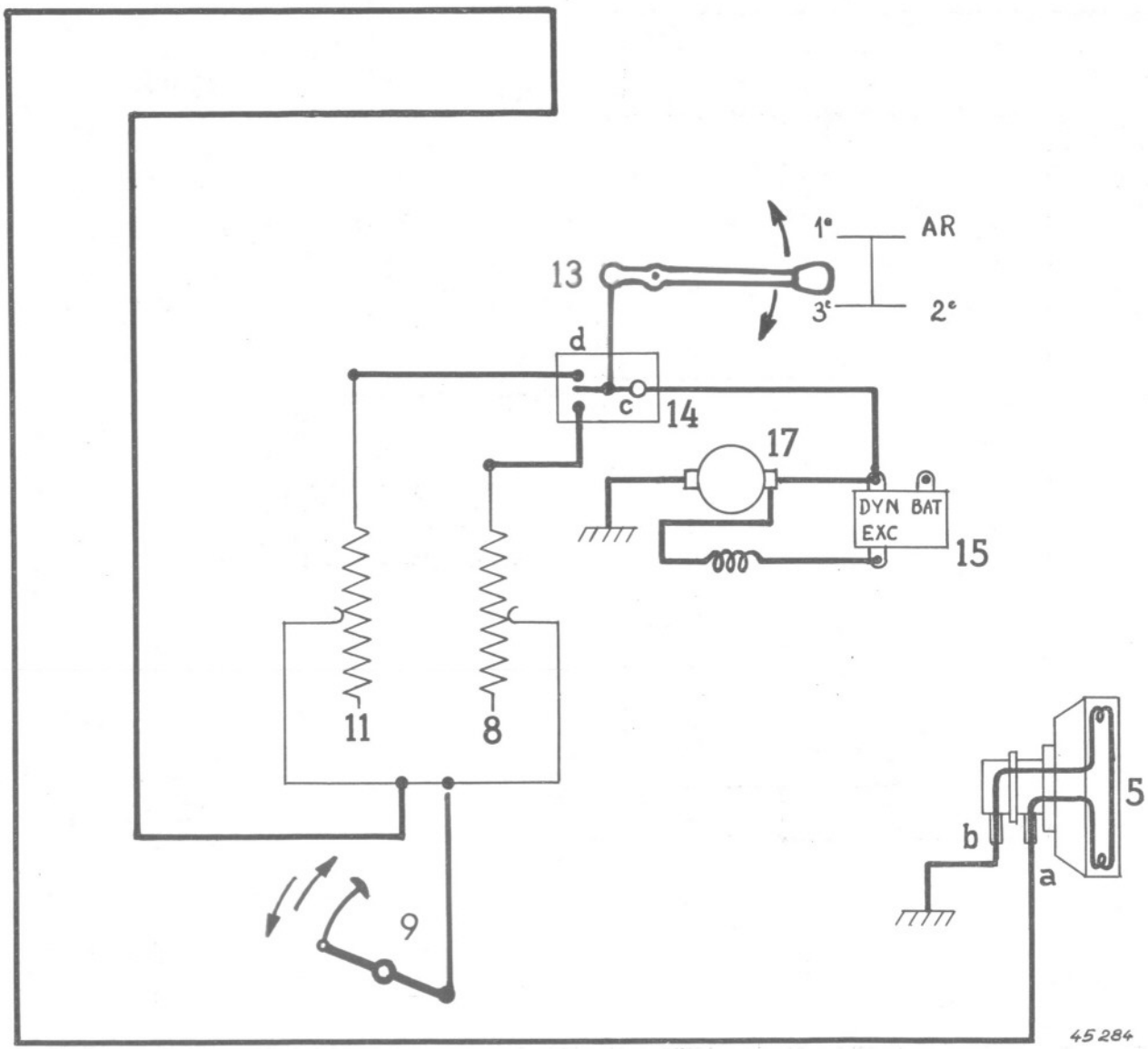

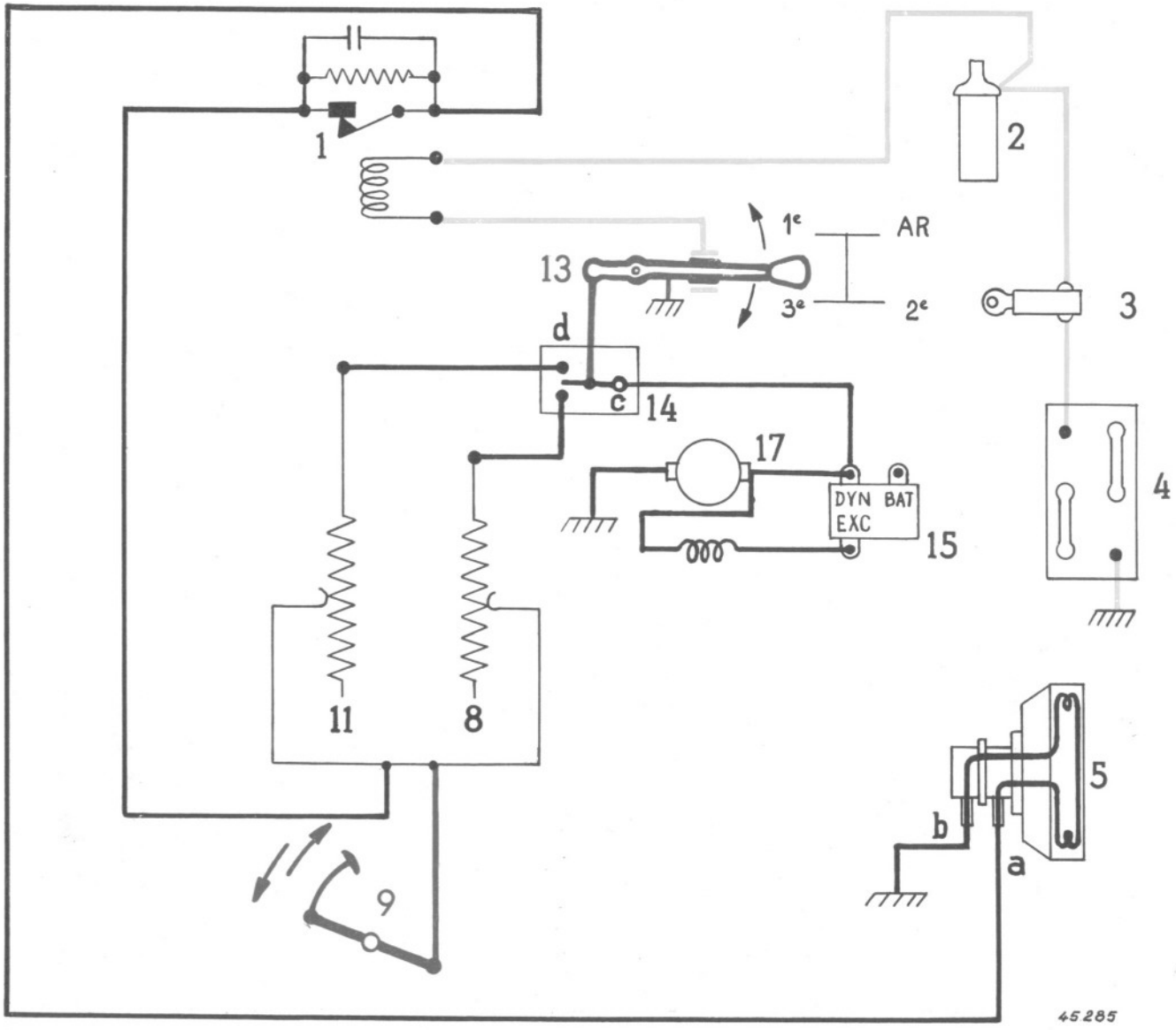

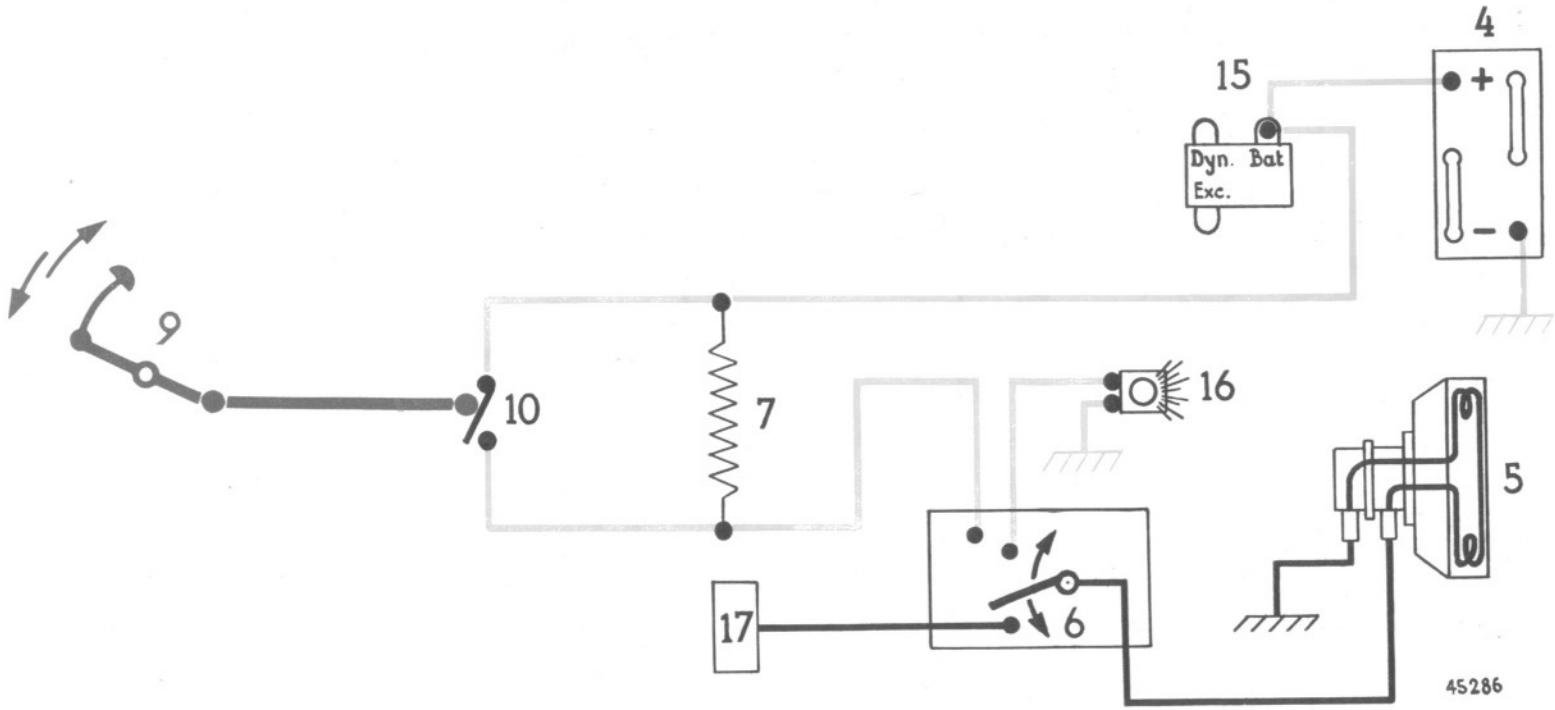

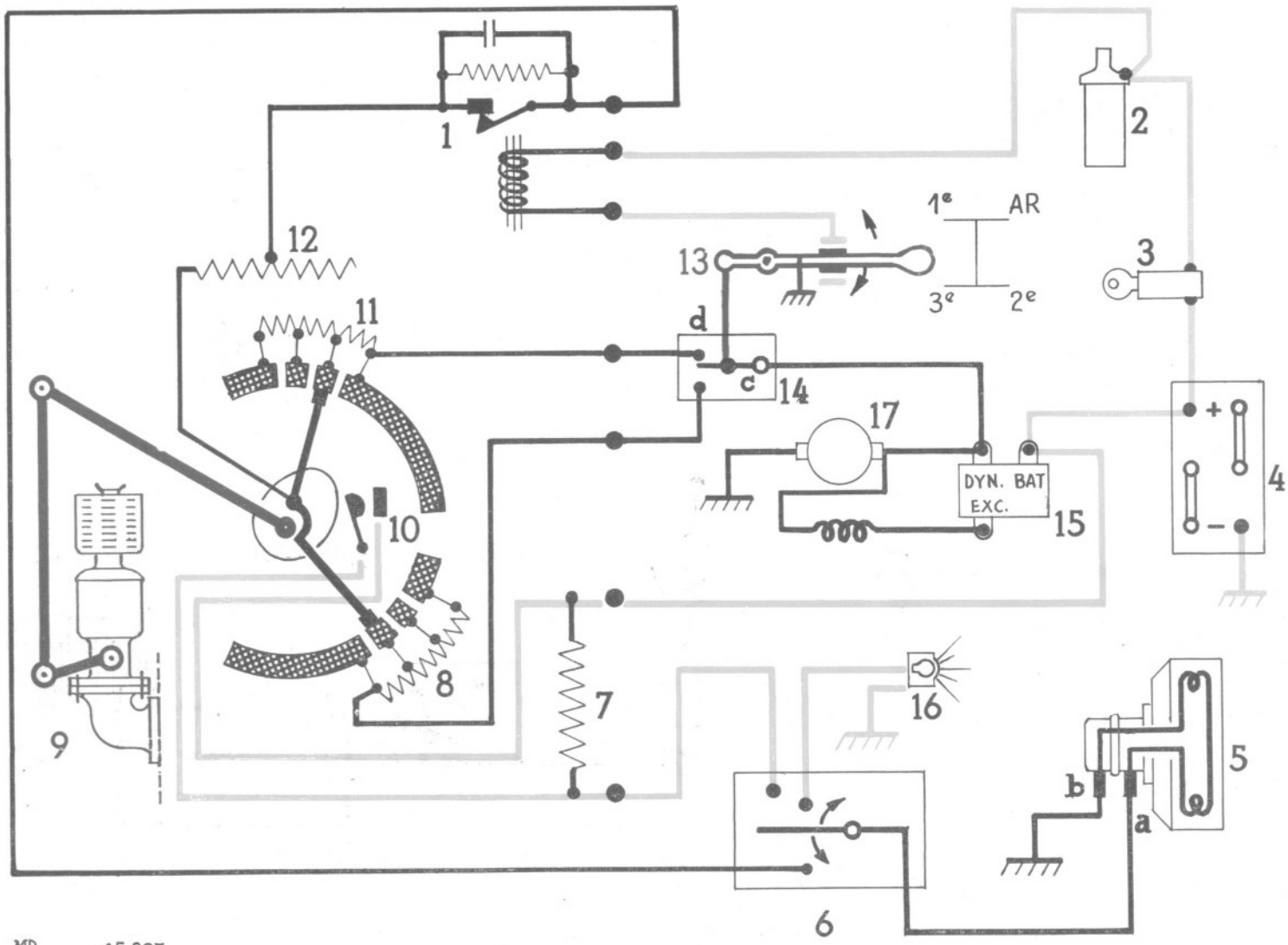

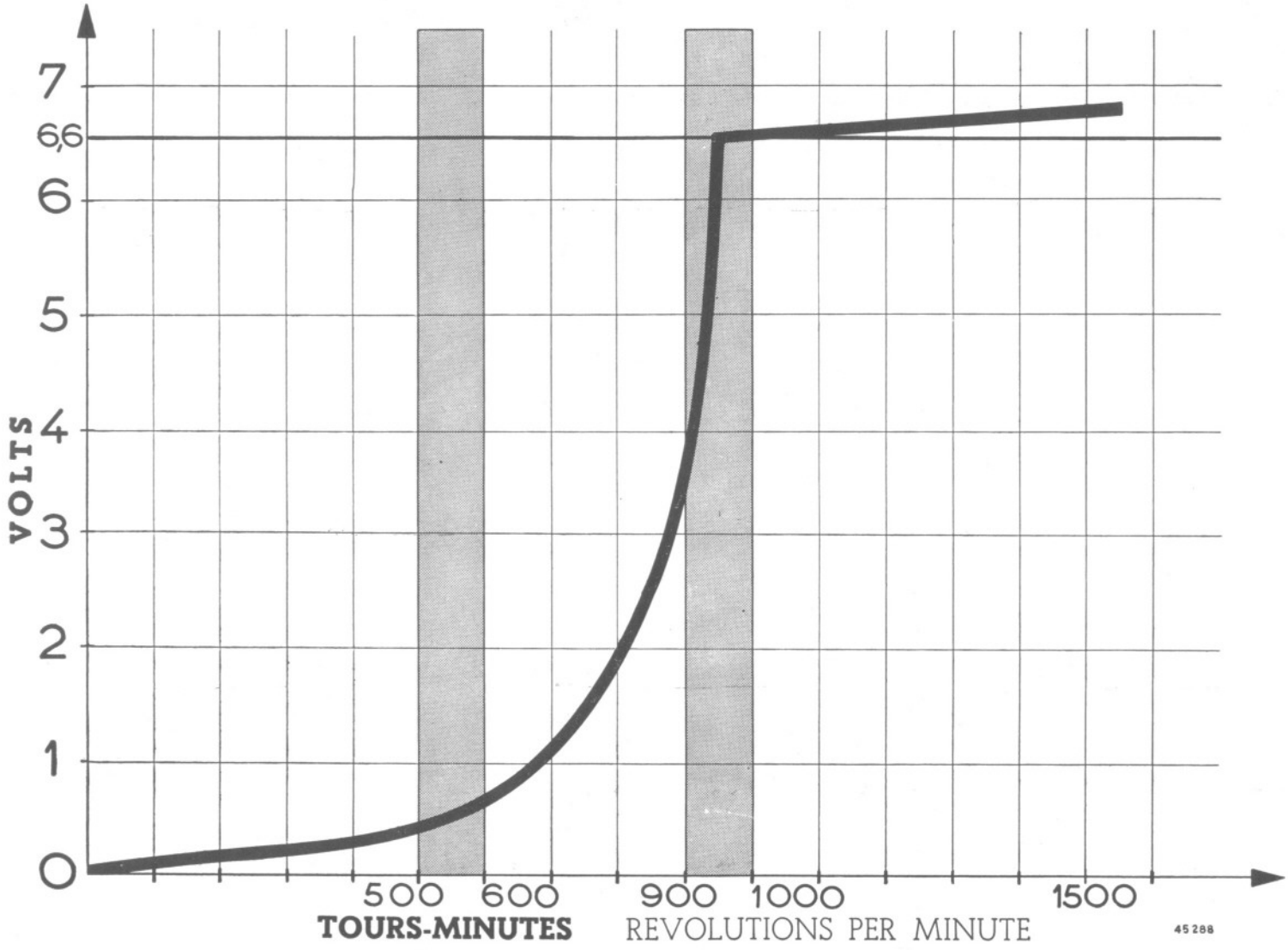

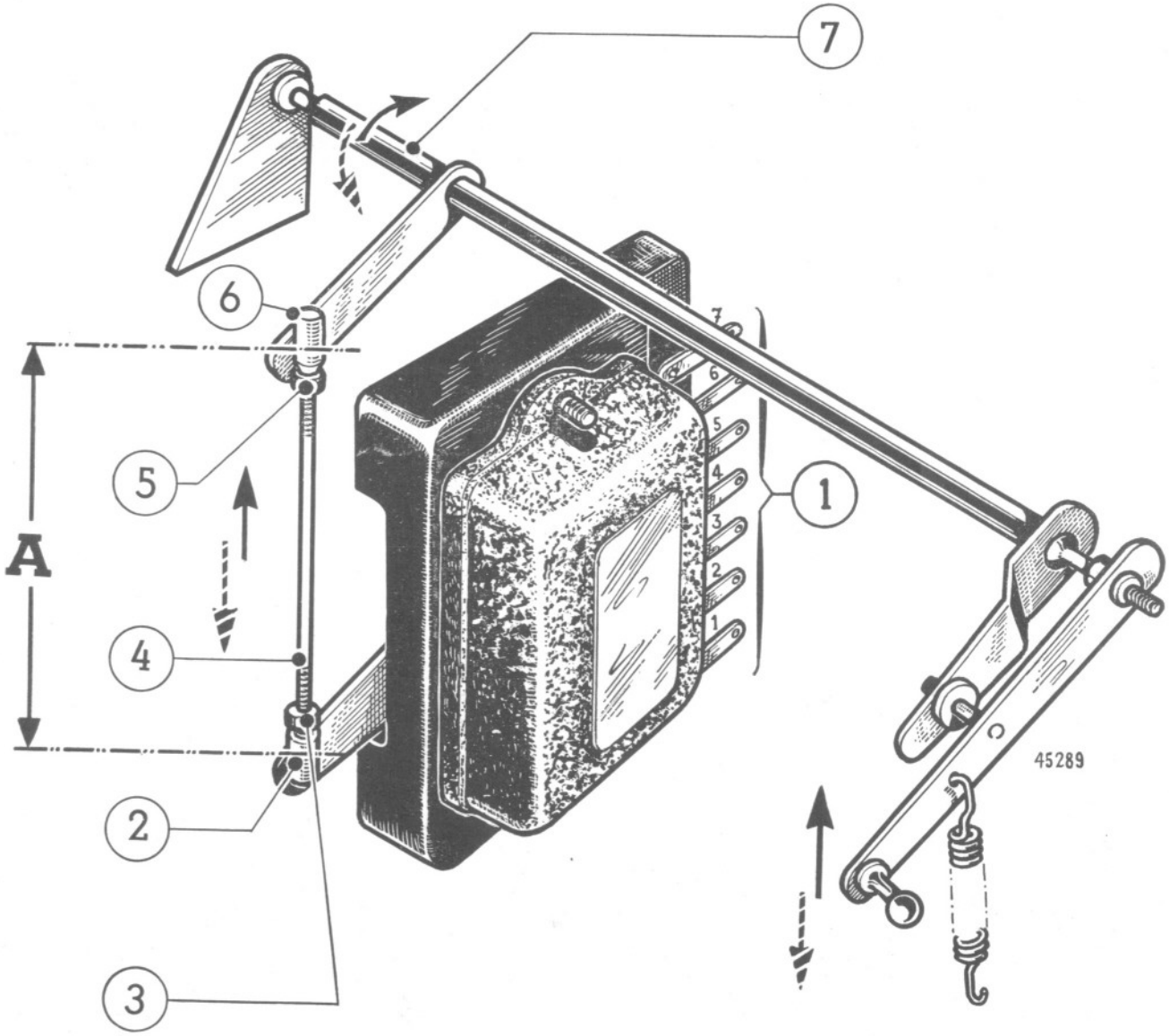

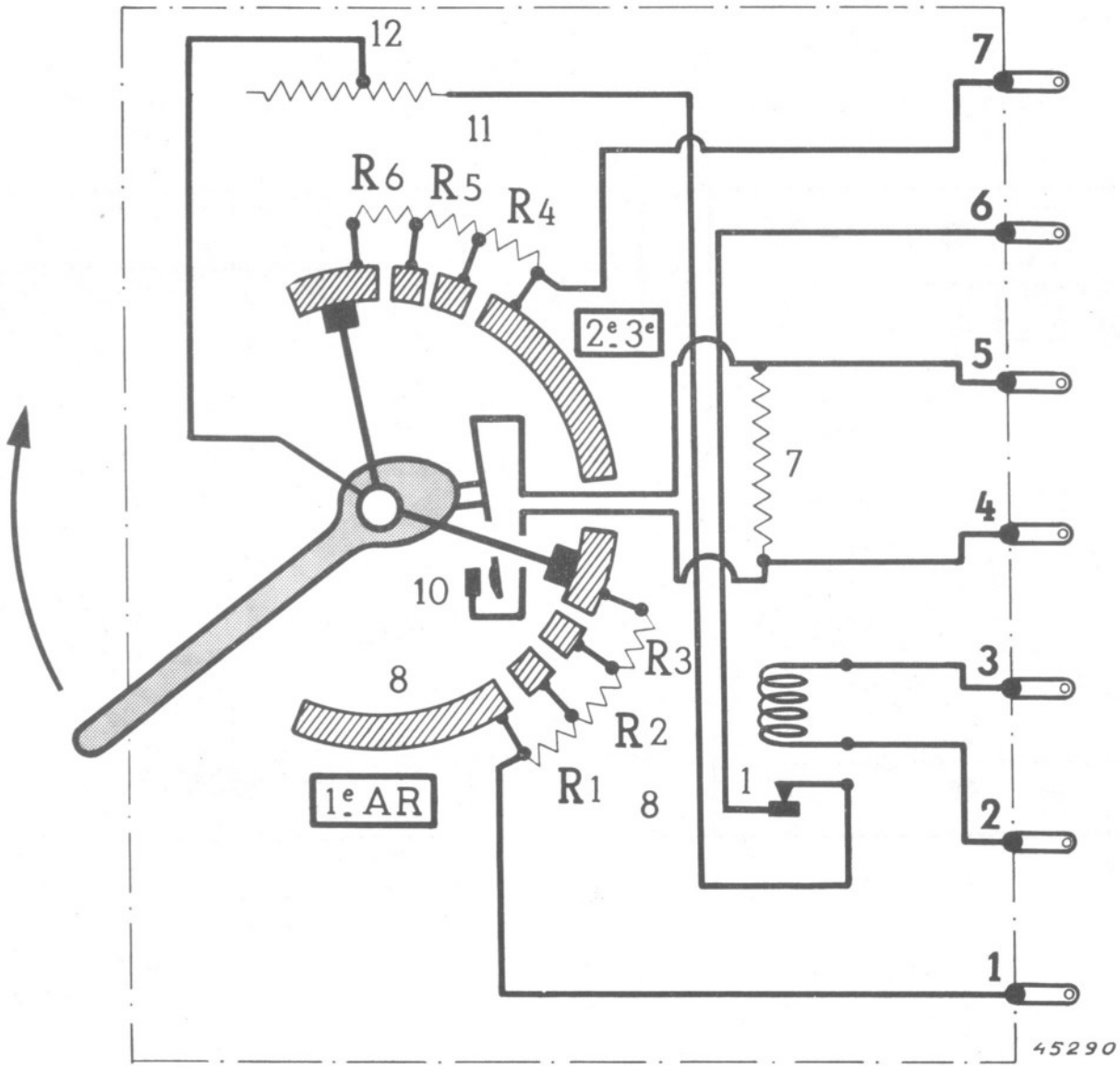

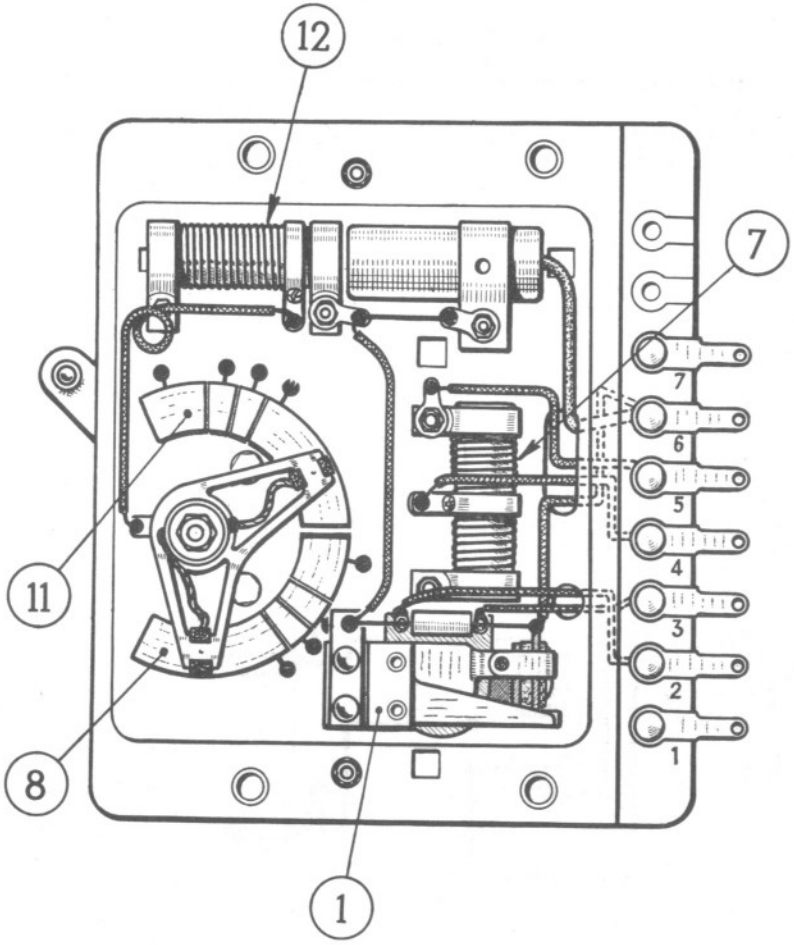

Fig. 1

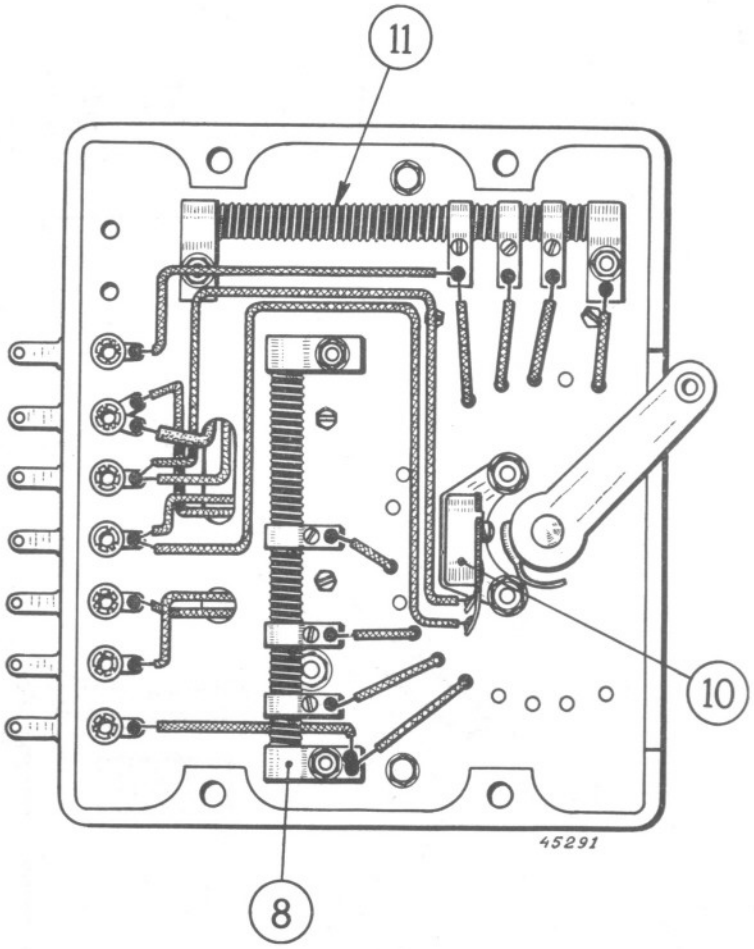

Fig. 2

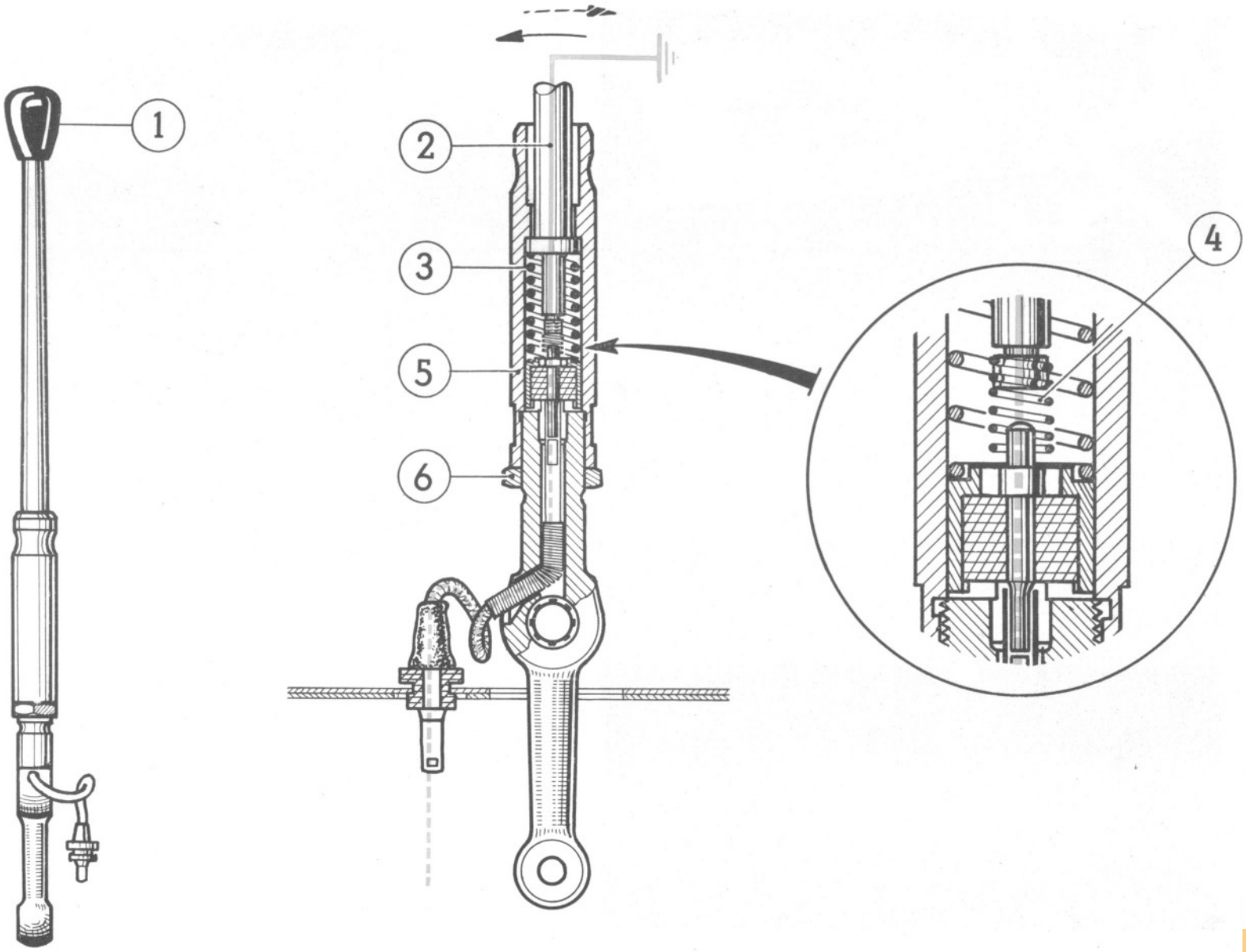

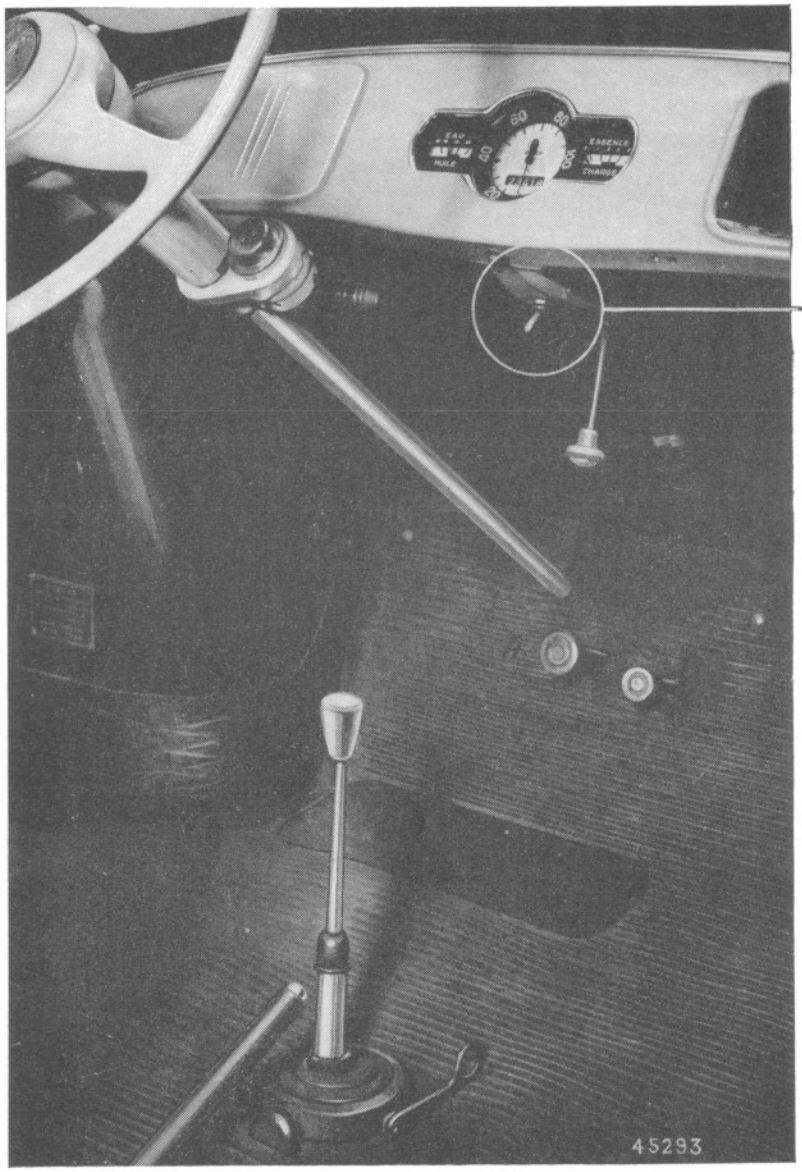

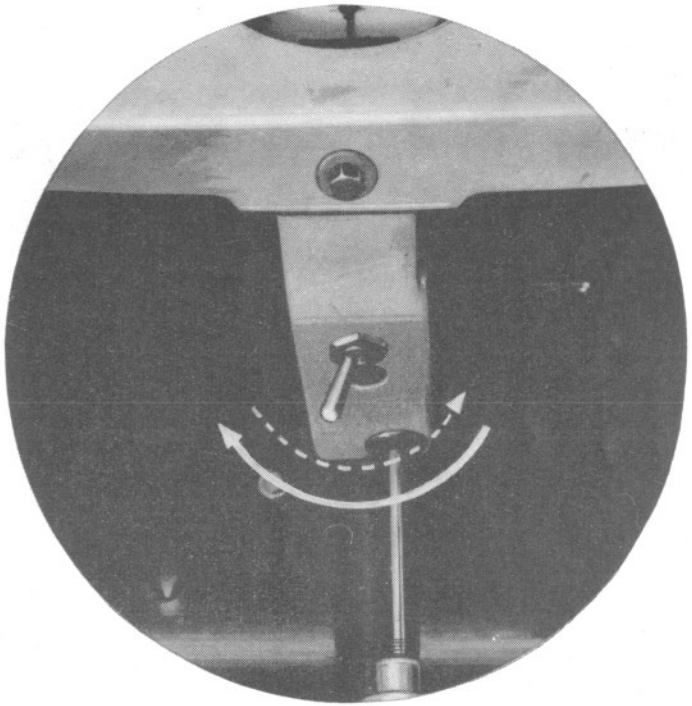

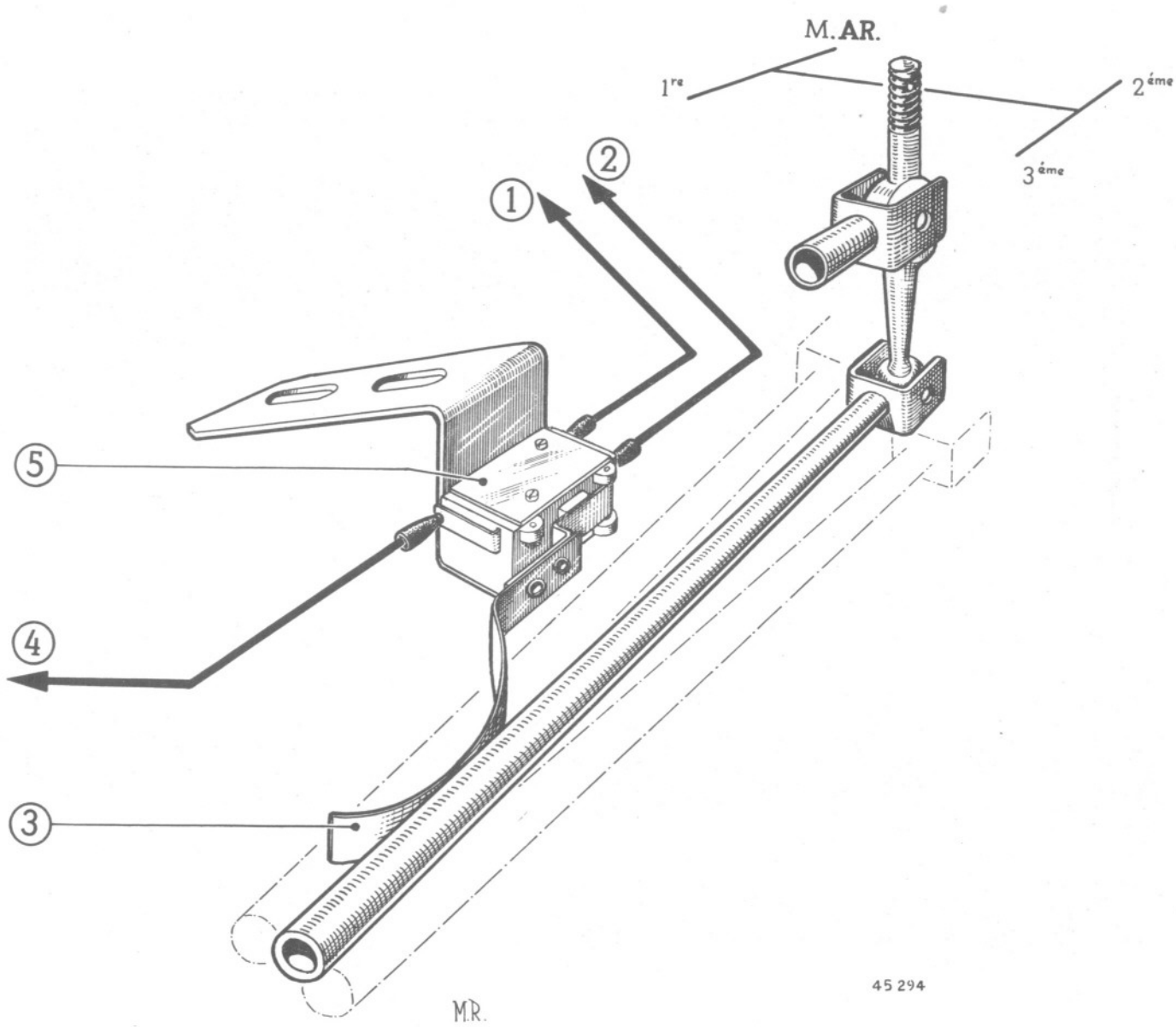

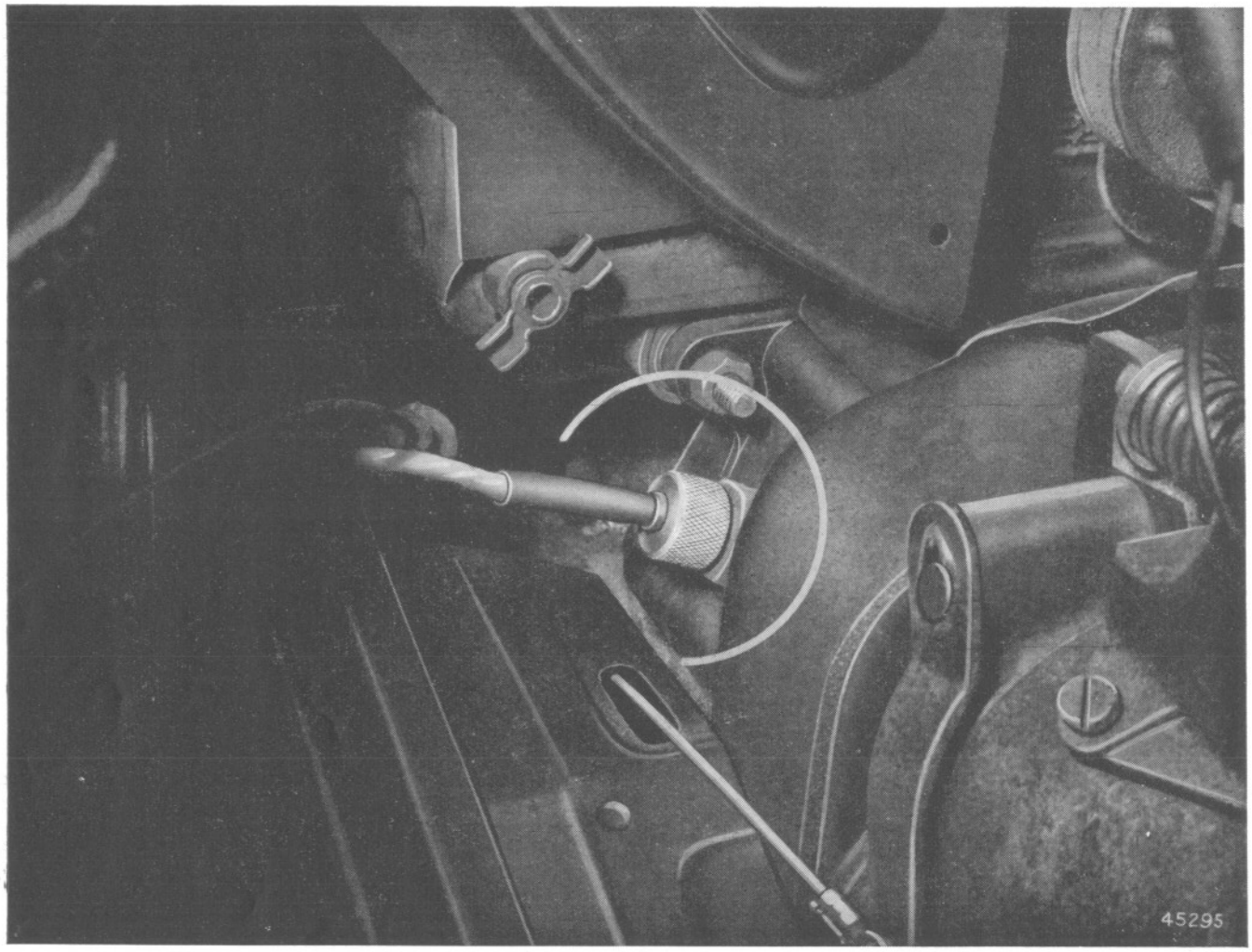

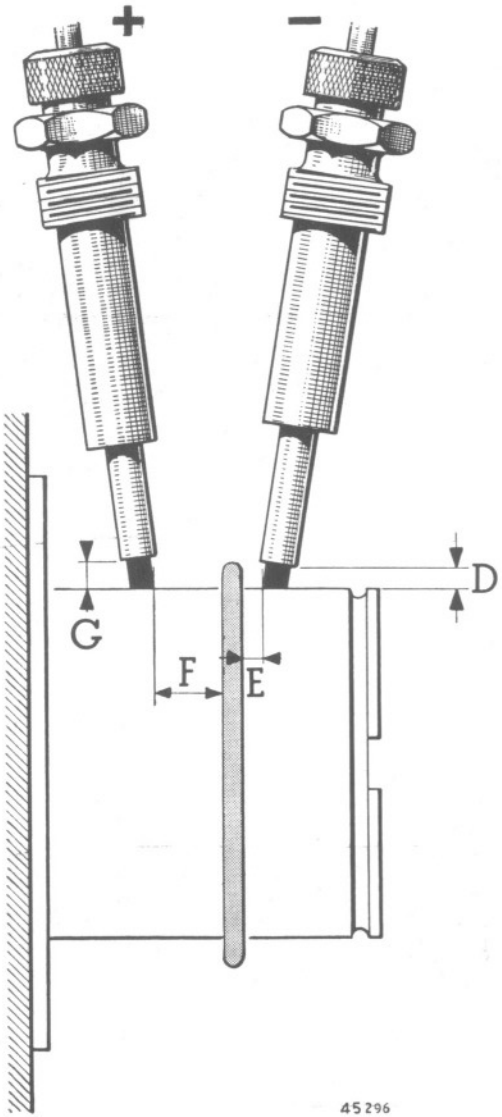

Fig. 1

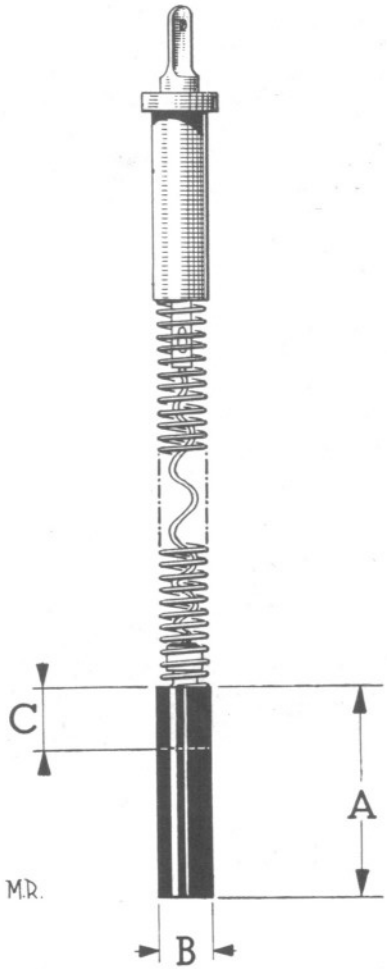

Fig. 2

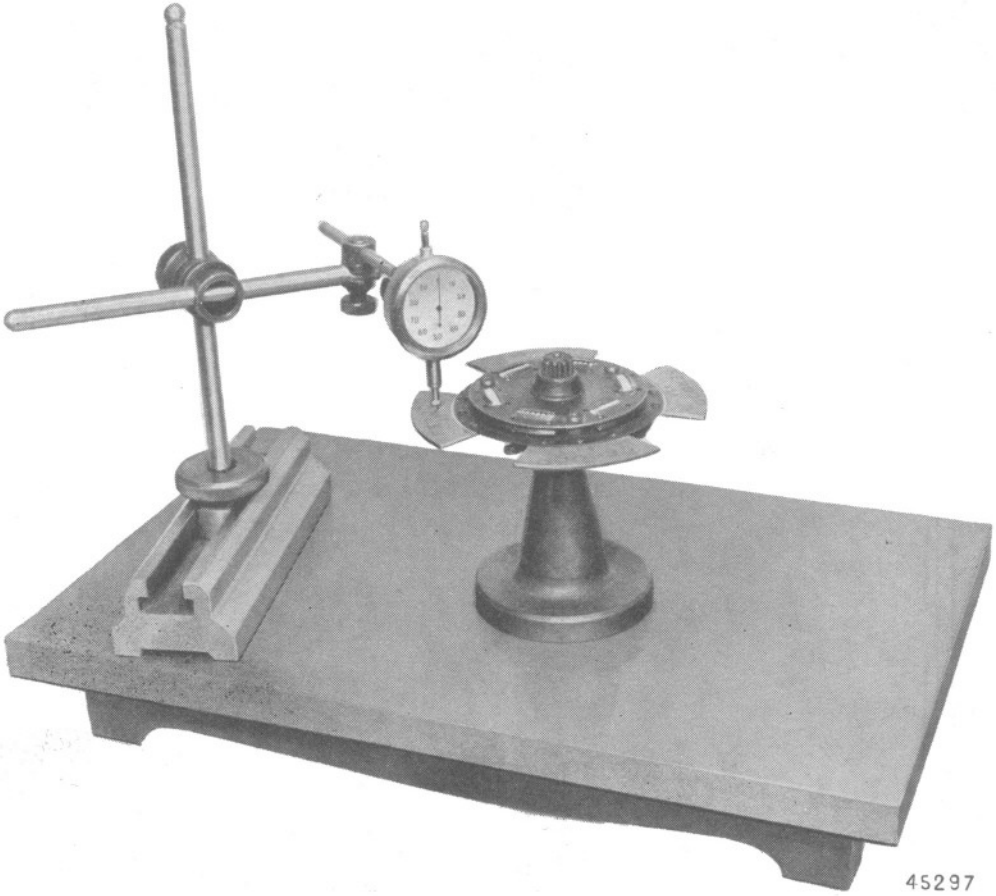

Fig. 1

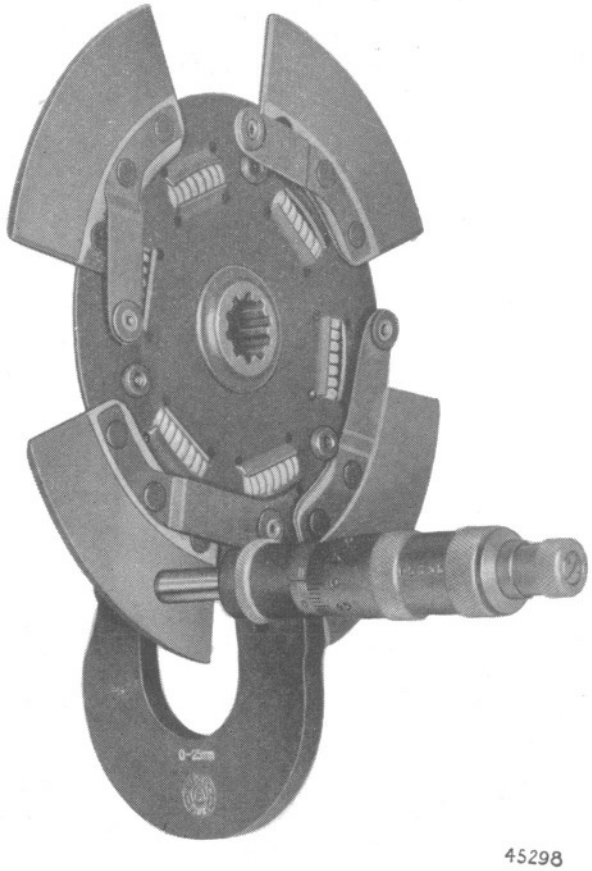

Fig. 2

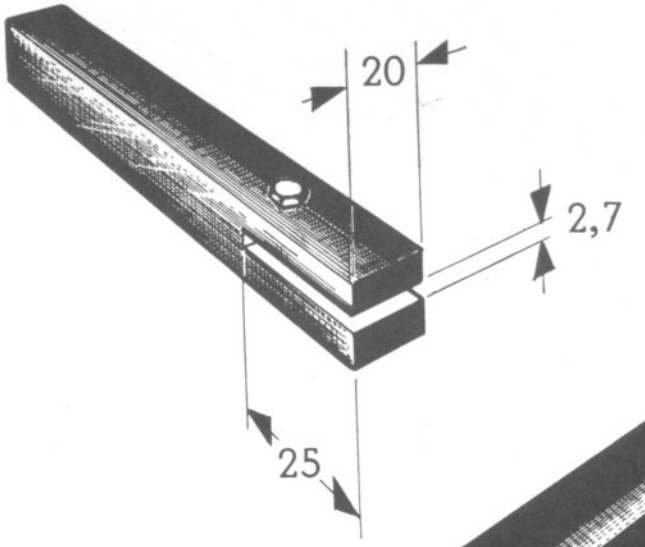

Fig. 1

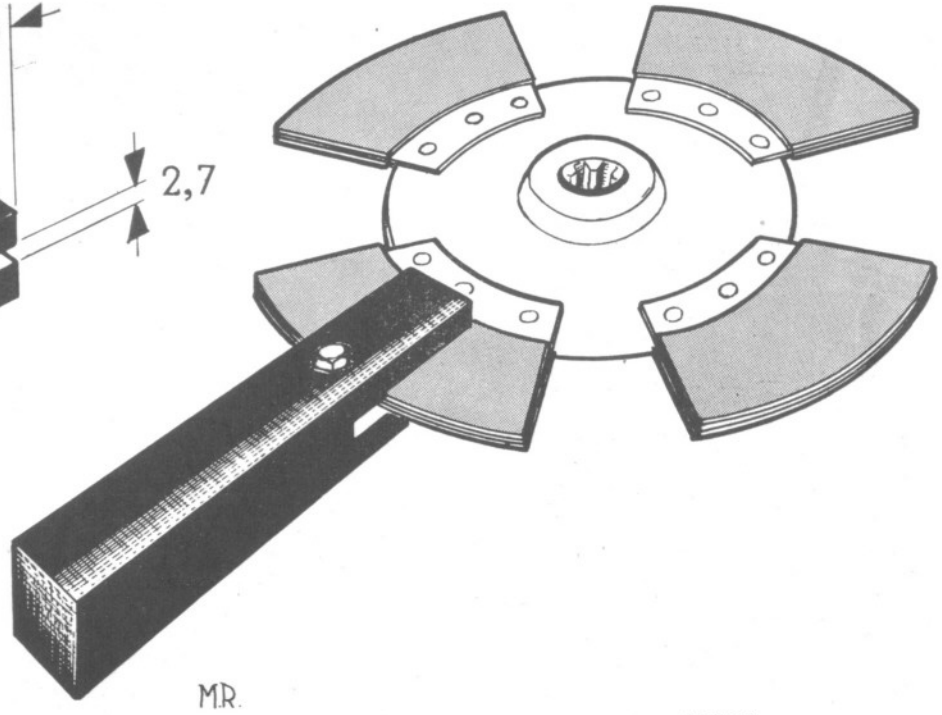

Fig. 2

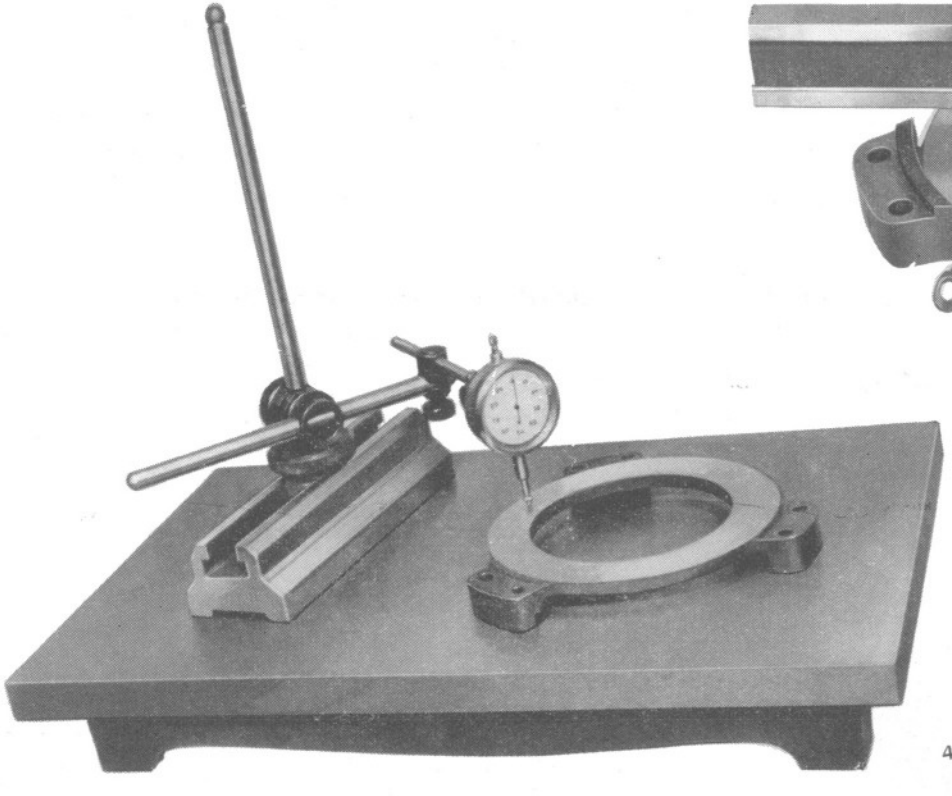

Fig. 1

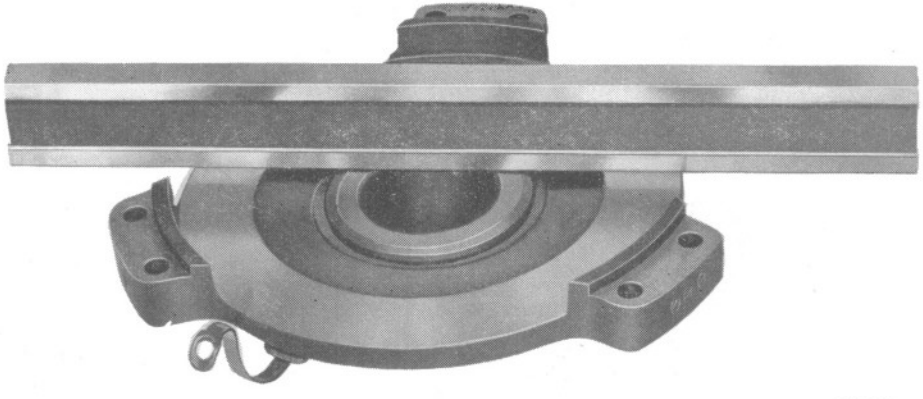

45301

Fig. 2

45300

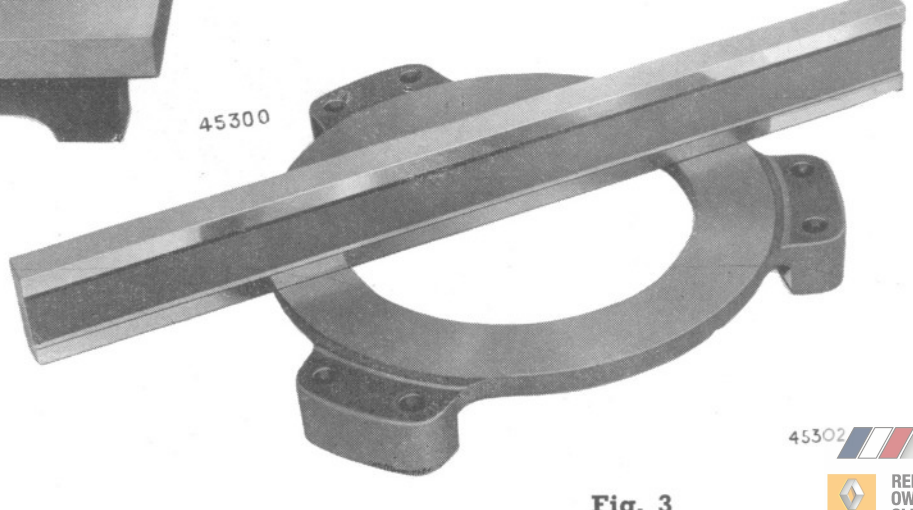

45302

Fig. 3

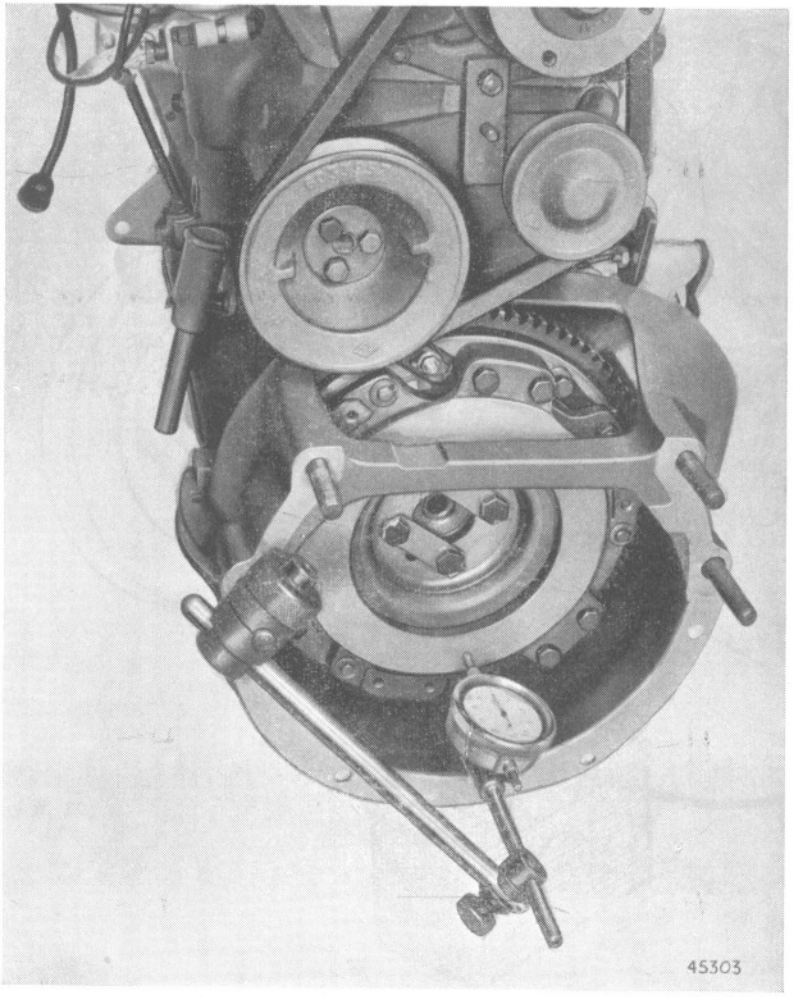

Fig. 1

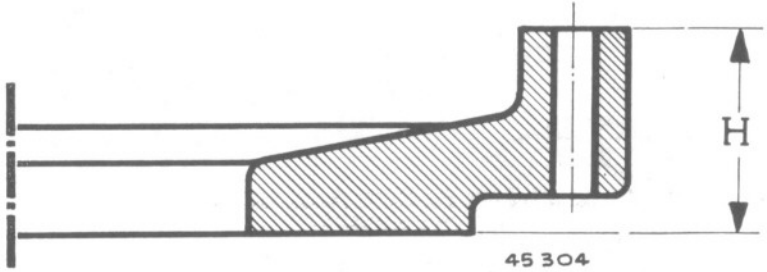

Fig. 2

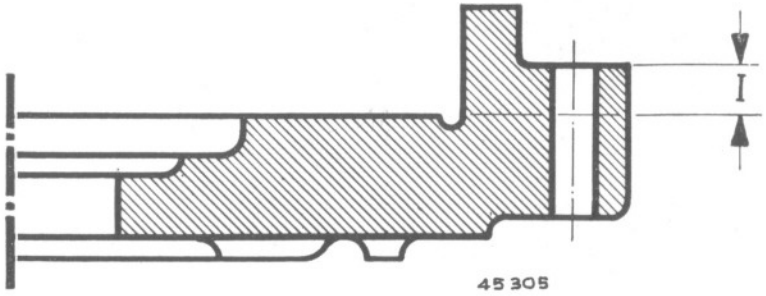

Fig. 3

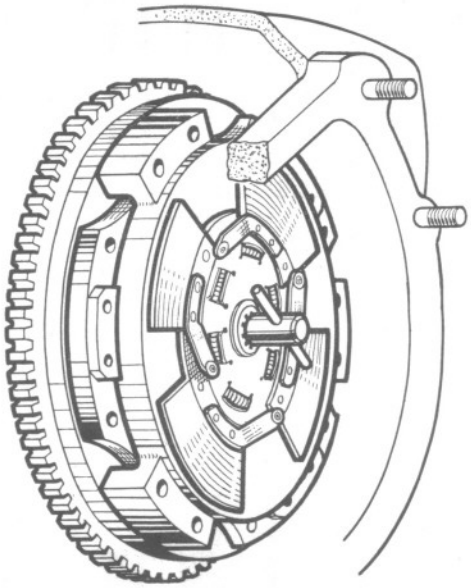

Fig. 1

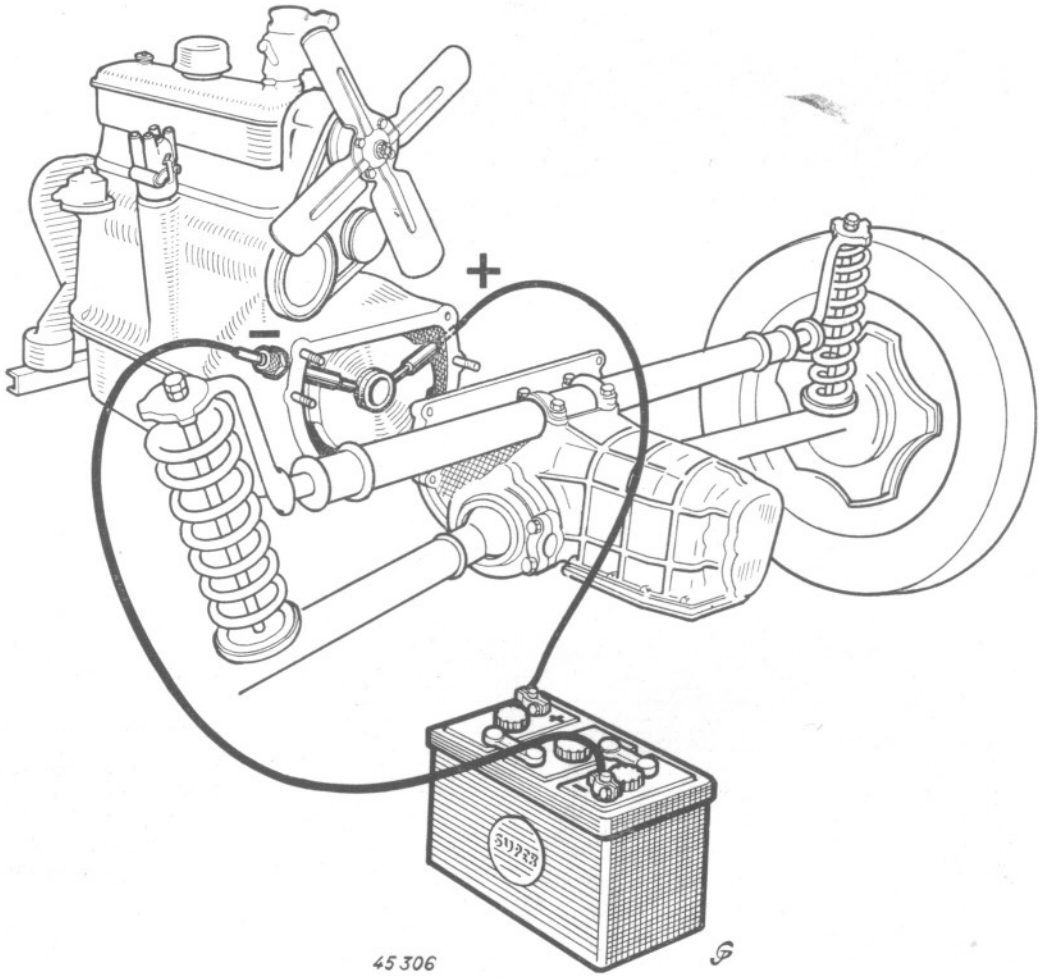

Fig. 2

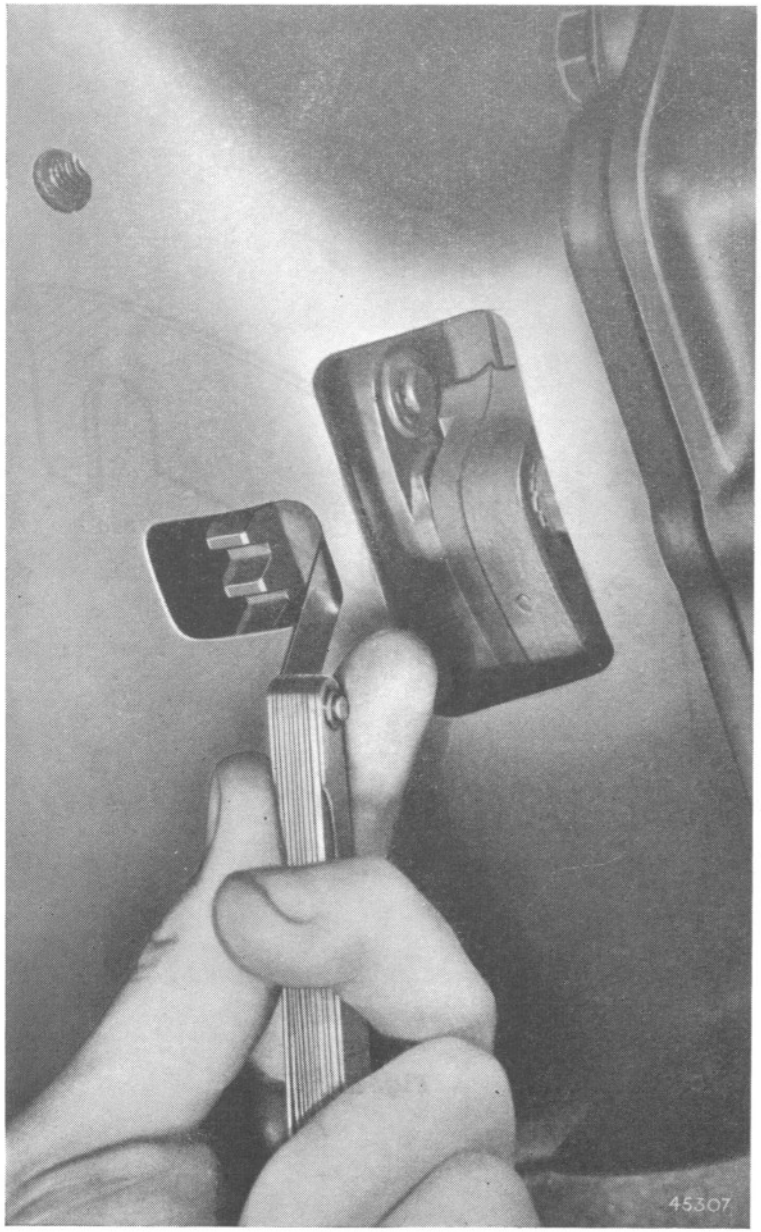

Fig. 1

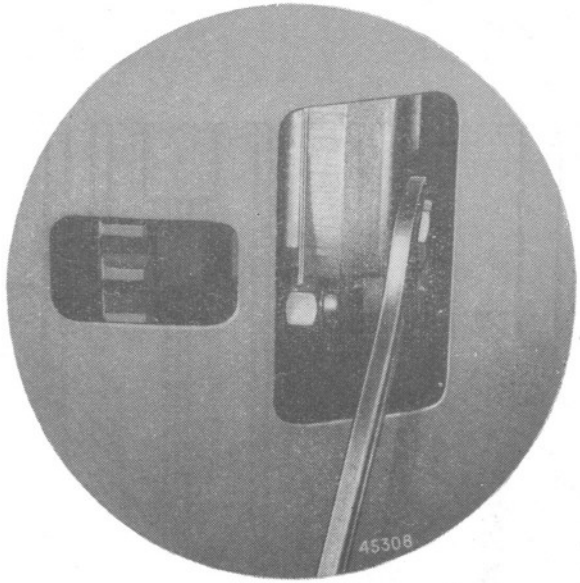

Fig. 2

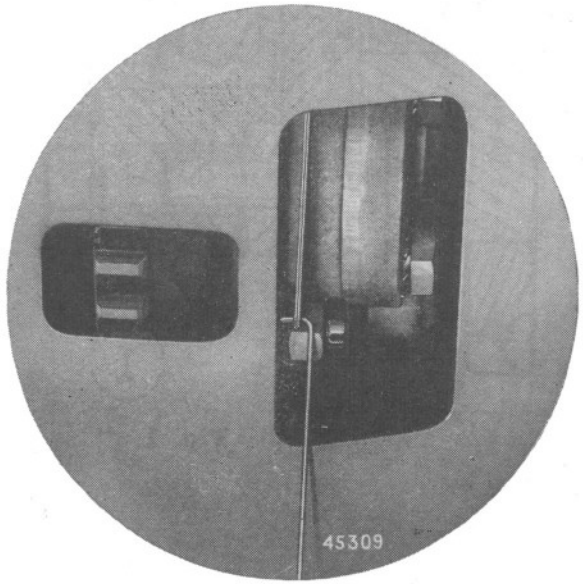

Fig. 3

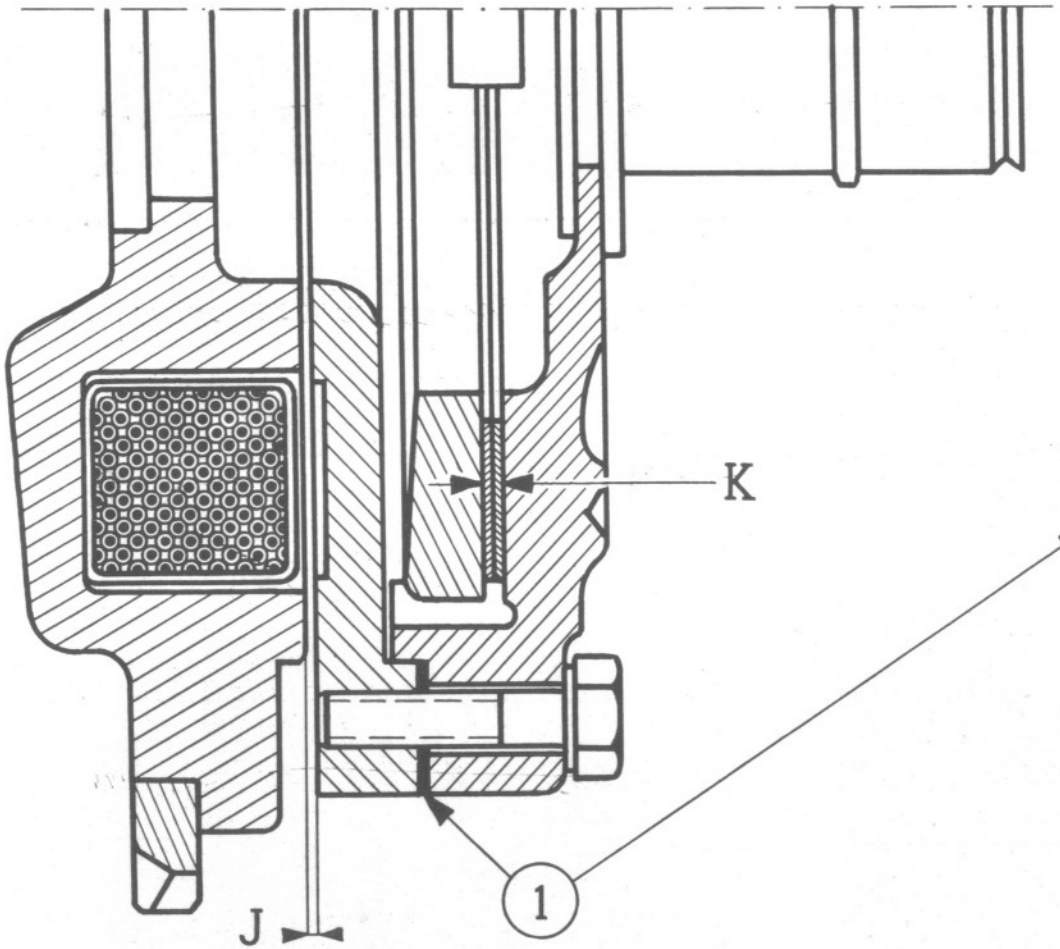

Fig. 1

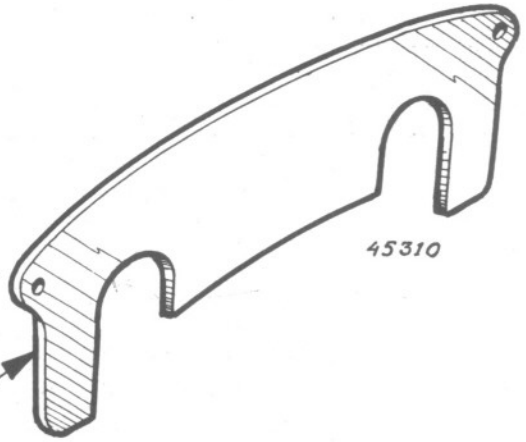

Fig. 2

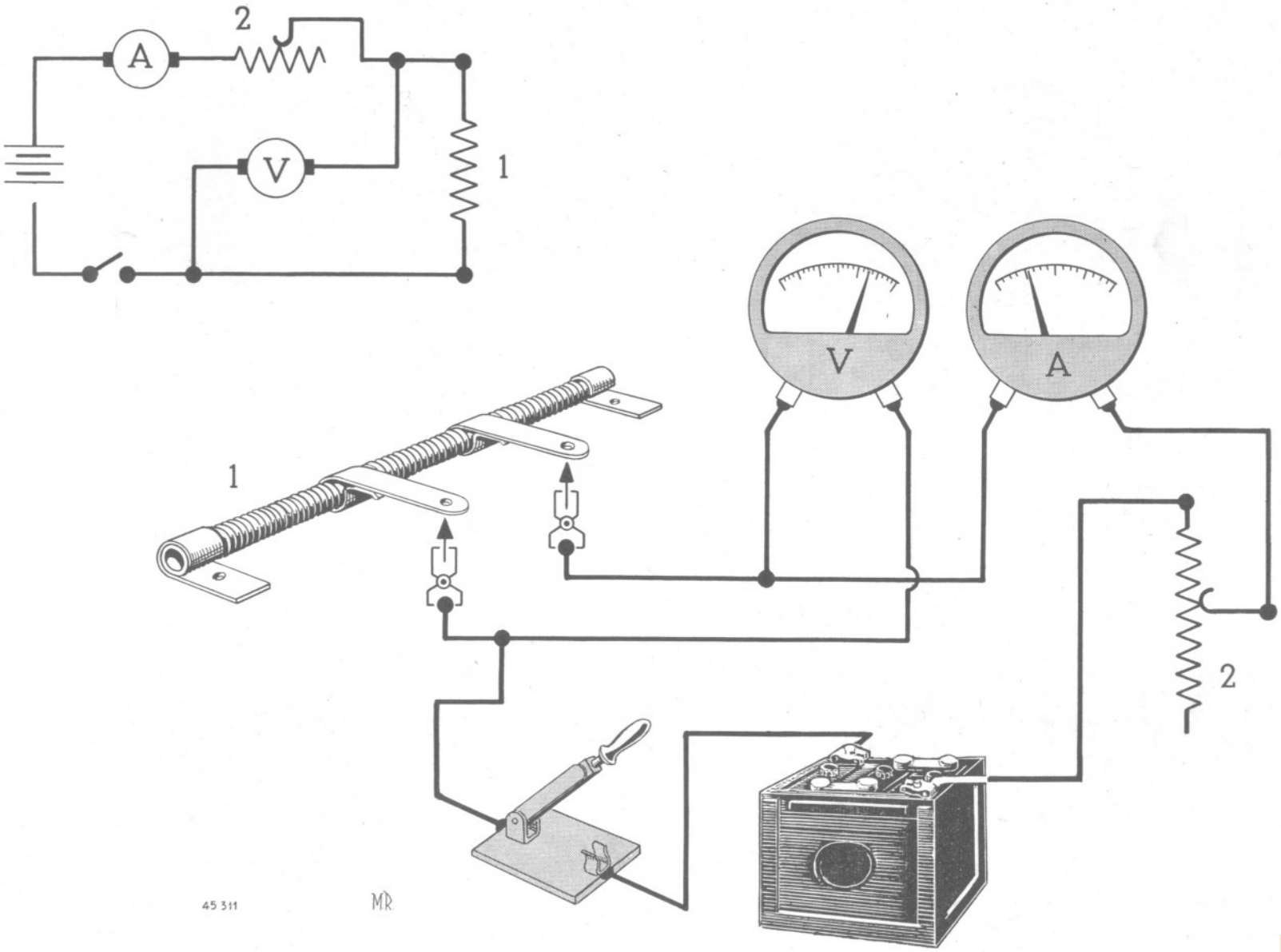

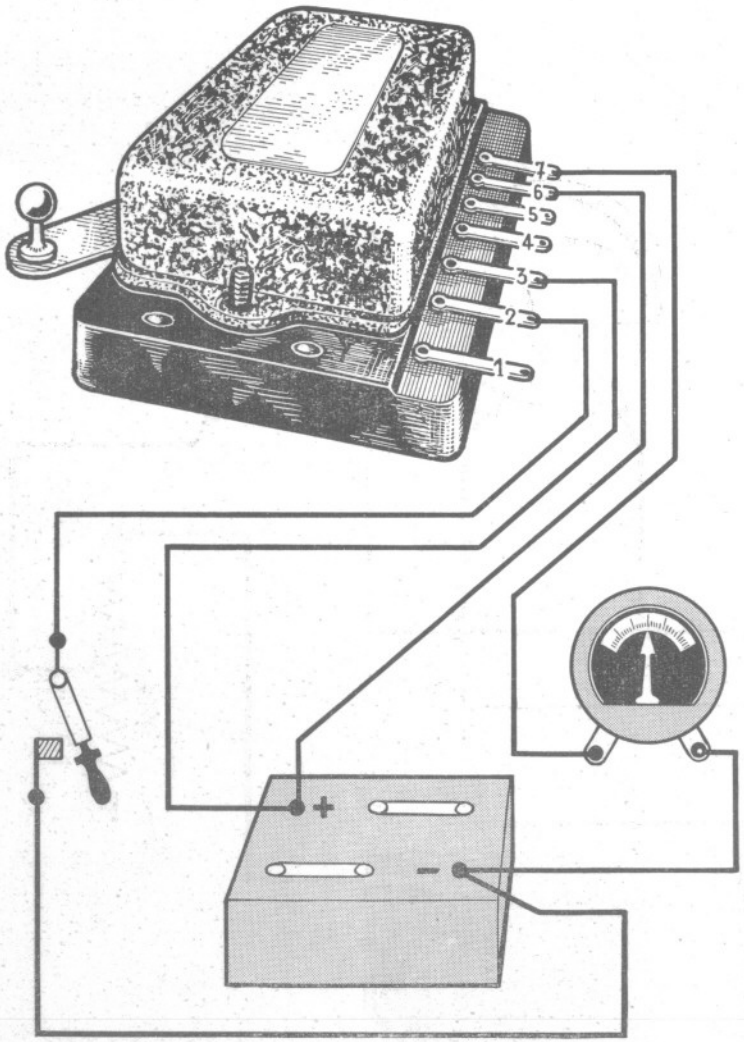

Fig. 1

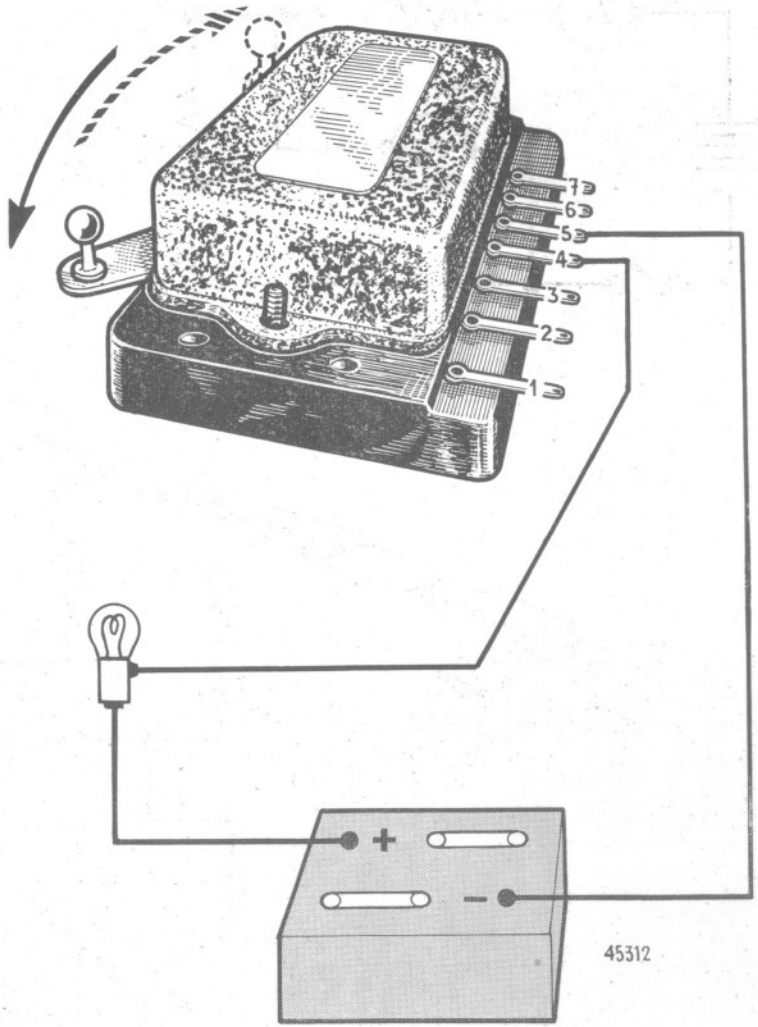

Fig. 2

TEXT

REPAIR INSTRUCTIONS

510 TYPE CLUTCH

THE "FERLEC", EH a 4 TYPE ELECTROMAGNETIC CLUTCH

PATENTS : S.A.F. FERODO

MODEL		CLUTCH REFERENCE MARKS		
		I		
R 1062	"Luxe" sedan	x		
-	Convertible (grand luxe)	x		
-	U.S.A.	x		

TEXT

510 TYPE CLUTCH

Mark I

SPECIFICATIONS

EH a 4 MECHANISM

Positive (+) and ground brushes at current receiving rings
Current supplied under tension of 6 volts
Maximum amperage : 4.82 Amps at 20 C (68 F)
Coil resistance : 1.2 Ohm at 20 C (68 F)
Air gap ranging from .47 to .42 mm (.0185 to .0165")
Plate load ranging from 210 to 240 kg according to air gap

FRICTION UNIT FOR EH a 4 MECHANISM

116 x 160 friction, 4 blades
Friction material thickness under 200 kg load : 2.5 to 2.52 mm (.0984 to .0992")

SPECIFICATIONS (continued)

POSITIVE AND GROUND BRUSHES FOR FERLEC CLUTCH

Number of brushes : 2
Grade : CG. 65 carbon

FERLEC CASE

Current supplied under 6 volt tension
Connections : through SGE clips
Rheostat controlled by lever and ball joint
Connection with carburetor through suitable linkage

SERMEC UNDERLOAD REVERSING SWITCH

This equipment cannot be repaired

GEMA GENERATOR BATTERY SWITCH

This equipment cannot be repaired

GEAR SHIFT LEVER FOR FERLEC CLUTCH

Current is supplied under 6 volt tension
Stationary contact : Silver
Contact spring : silver glucinium bronze
Connection : SGE clip.

TABLE OF CONTENTS

TABLE OF CONTENTS (Continued)

TABLE OF DIMENSIONS, ADJUSTMENTS & TOLERANCES

DESCRIPTION	DIMENSIONS AND MEASUREMENTS		ADJUSTMENTS	TOLERANCES
	STANDARD	REPAIR		
Mechanism :				
- Air gap . . . . . *(PLATE 24)*	J = .45 mm (.0177")			+ .02 (.0008") - .03 (.0012")
- Head to intermediate plate mounting bolts.	Torque : 1.8 m/kg or 8 ft/lbs			
- Carrier to pressure plate mounting bolts.	Torque : 1.8 m/kg or 8 ft/lbs			
Intermediate plate :				
- Out of parallel and warp maxi . .				± .04 (.0016")
- Plate thickness . . . . . *(PLATE 21, FIG.2)*	H = 22.6 mm (.8898")			+ 0 - .05 (.002")
Pressure plate :				
- Out of parallel and warp maxi. .				± .04 (.0016")
- Plate depth . . . . . *(PLATE 21, FIG.3)*	I = 9 mm (.354")			± .05 (.002") + 0
- Clutch coil	1.2 OHM			+ .12 (.0047") + 0
Friction Unit :				
- Thickness of new sectors. . . . . *(PLATE 24)*	K = 2,5 mm (.0984")			+ .02 (.0008") - 0
- Minimum thickness of sectors. . .				corresponds to zero air gap with adjust. shims removed
- Tolerances on worn sectors thickness				± .04 (.0016")
- Maximum friction unit warping . .				± .1 (.0039")

TABLE OF DIMENSIONS, ADJUSTMENTS AND TOLERANCES (continued)

DESCRIPTION	DIMENSIONS AND MEASUREMENTS		ADJUSTMENTS	TOLERANCES
	STANDARD	REPAIR		
Positive (+) and Ground Brushes *(PLATE 17)*				
- Minimum length of brush . . . (when new).	A = 33mm (1.3") C = 12mm (.47")			
- Brush diameter.	B dia.= 7mm (.27")			+ 0 mm - .1mm (.0039")
Brush holders : *(PLATE 17)*				
- Distance from current receiving rings				D & G = 1.5 to 2.8 mm (.059 to .11")
- (+) distance from insulator (clutch applied position) . .	F = 1.8 mm (.0709")			+ .1 mm (.0039")
- Ground distance from insulator (clutch released position)	E = 1.5 mm (.059")			+ .1 mm (.0039")
"FERLEC" case : *(PLATES 8 AND 11)*				
- Resistance adjustable to wear			0 to 2.5 OHM	
- Rheostat (low and reverse)	R1 + R2 + R3 = 2.5 OHM R1 + R2 = 1.3 OHM R1 = .6 OHM			+ .1 + 0 + .1 + 0 + .1 + 0

TABLE OF DIMENSIONS, ADJUSTMENTS AND TOLERANCES (Continued)

DESCRIPTION	DIMENSIONS		ADJUSTMENTS	TOLERANCES
	STANDARD	REPAIR		
- Rheostat (interm. & high)	R4 + R5 + R6 = 1.35 OHM			+ .1 + 0
	R4 + R5 = 9 OHM			+ .1 + 0
	R4 = .5 OHM			+ .1 + 0
- Resistance (parking).	1.4 OHM			+ .1 + 0
- Starting position of brushes. . .	center 1st terminal			
- Short circuit position of parking resistance.	brushes contact by approx. 1mm (.039") the 2nd terminal (about 1,500 engine RPM)			
Case control linkage :				
- Cohnecting link : center distance . . . . . *(PLATE 10)*	A = approx. 158 mm (6.22")		Adjust center distance to locate brushes at center of first terminal *(PLATE 11)*	

SPECIALS TOOLS

TOOL DESCRIPTION	RENAULT SERVICE REFERENCE	SAPRAR REFERENCE OR LOCAL MANUFACTURE	ILLUSTRATIONS	
			Plate	Figure
- Clutch disc alignment tool	Emb.02	8.900	22	1
- Friction unit support.	Emb.06	12.059	18	1
- Friction sectors straightening fork.	Emb.08	FL	19	1

GENERAL

The various parts of the "FERLEC" electromagnetic clutch *(PLATE 8)*

REFERENCE	INDEX	PART NAME
5		Mechanism and friction unit
5	a	Positive (+) brush
	b	Ground brush
17		Generator
4		6 volt battery (cell type)
15		Regulator
14		Underload-reversing switch for power to rheostats
14	c	Position of reversing switch for current supply to low and reverse rheostat
	d	Position of reversing switch for current supply to intermediate and high rheostat
8		Low and reverse rheostat (in FERLEC case)
11		Intermediate and high rheostat
12		Adjustable resistance according to wear (in FERLEC case)
1		Clutch release relay (in FERLEC case)
1		Clutch release relay contact protective resistance and condenser (in FERLEC case)
6		Change over or generator-battery switch for operation either with battery or with generator
6		"Generator" position of switch
		"Battery" position of switch
7		Stationary resistance, or so-called "parking" resistance (in FERLEC case)
10		Switch for short circuiting the parking resistance
16		Tell tale lamp or indicator for operation with battery
9		Control linkage : FERLEC case and carburetor
3		Ignition switch
2		Ignition coil
13		Gear shift lever with contact
		Color code used on the plates showing electrical diagrams :
		- generator circuit : black
		- battery circuit : green
		- mechanical controls and linkages : red
		- parts or assemblies : black

DESCRIPTION

1° MECHANISM AND FRICTION UNIT

PLATES 1, 2 AND 4.

A) The assembly mounted integral with the crankshaft **(14)** includes 4 items :

a) Head **(1)**
b) Carrier **(5)**
} Electromagnetic unit

c) Intermediate plate **(6)**
d) Pressure plate **(13)**
} Clutch unit

The 4 items : a - b - c - d - are assembled integral two by two :

- Head **(1)** and intermediate plate **(6)**
- Carrier **(5)** and pressure plate **(13)**

The above two assemblies rotate as a unit being made integral by 3 driving lugs **(4)** which allow for slight lenghtwise travel.

The pressure plate has two current receiving rings **(10)** and **(12)** one grounded and the other insulated and connected through a shunt to the positive terminal of the coil **(3)** located in head **(1)**.

Return springs **(16)** are located in-between the head **(1)** and the carrier **(5)** and, by forcing the latter apart (and, consequently, the plates attached to carrier and head), clear the friction unit **(7)** upon clutch release.

Special shims **(1)** *(PLATE 24)* are inserted between the pressure plate **(13)** attaching lugs and the carrier **(5)**. The lugs are used for adjusting the air gap upon initial assembly and when friction unit **(7)** thickness has dropped below a minimum permissible value.

B) Friction unit **(7)** is assembled integral with gear box input shaft **(9)**, when rotating, and is permitted to slide axially, being mounted on splines.

The friction unit has a conventional type damper-hub or center disc where friction sectors are attached.

Friction plates **(15)** or wear compensating plates are further permanently in contact with the pressure plate **(13)**. Their function is to provide for a positive driving action not enough for driving the vehicle but which will compensate for the wear of the transmission.

DESCRIPTION (Continued)

2° CURRENT SUPPLY

PLATE 8

D.C. current supply to the "FERLEC" clutch mechanism, from the generator **(17)** or from the battery, is through two sliding brushes a and b, sliding into brush holders and contacting current receiving rings **(10)** and **(12)**. *(PLATE 1)*. The rings are carried by the pressure plate.

Brush holders a and b are screwed onto the cylinder block, with the positive (+) holder at LH side of engine and the ground one at the RH side.

The positive brush is insulated from the ground by means of an insulator ring and is connected to the unit through a SGE clip.

The ground type brush is grounded direct through its brush holder plug and no wire is connected to the brush.

Both brushes are identical, the only difference being the type of brush holder plug used.

3° THE "FERLEC" CASE

PLATES 11 AND 12

The FERLEC case is a composite assembly whose function is to control the flow of current to the FERLEC clutch :

- Operation with generator { Clutch applied / Clutch released
- Operation with battery { Parking / Emergency conditions

The FERLEC case includes the following :

A) Operation with generator :

a) A dual rheostat for, respectively low and reverse gears **(8)** and intermediate and high **(11)**. The rheostat regulates the flow of current to the clutch according to the carburetor throttle plate opening, the latter controlling the rheostat through suitable mechanical linkage.

b) An adjustable resistance **(12)** for consistent clutch operation whatever the wear of the friction materiel and unit.

c) A relay **(1)** controlled from the gear shift lever and providing for clutch release by cutting off the current supply to the clutch.

An assembly incorporating a condenser and a resistance protects the relay contact points from deteriorating due to sparks resulting from circuit breaking.

B) Operation with battery :

a) A stationary or parking resistance **(7)** for current limitation in the clutch when parking with clutch applied.

DESCRIPTION (Continued)

b) A switch **(10)** short circuiting the parking resistance upon accelerating, thereby warranting maximum current flow to clutch. The switch is controlled through a cam mounted integral on the rheostat lever.

Mechanical connection from the case to the carburetor throttle control is through a coupling rod **(7)** *(PLATE 10)* and link **(4)** *(PLATE 10)*. This linkage is assembled and hinged to ball joints.

4° GEAR SHIFT LEVER

PLATE 13

The special gear shift lever included in the FERLEC clutch kit, has two distinctive functions :
- Gear selection and shifting with conventional mechanical type gear box or transmission;
- Controlling the clutch release relay.

The gear shift lever incorporates an electrical contact **(4)** which grounds the clutch release relay current supply circuit.

Due to the lever design and assembly, ground connection is achieved only when shifting from forward to reverse or from reverse to forward direction.

The positive (+) electrical connection is through a SGE clip on a through-floor terminal. The latter is connected to the lever stationary contact by an insulated flexible wire.

Grounding is through mechanical assembly of lever with body. A return spring **(3)** provides for "cut off" position of lever contact and thereby for non-supply of current to clutch release relay, when the system is not operated.

5° UNDERLOAD-REVERSING SWITCH

PLATE 15

The underload-reversing switch is attached to the floor in the drive shaft tunnel. The switch is controlled by the gear shift link through an elastic type lever. The switch provides for current supply from the generator to the clutch by means of the low and reverse rheostat or of the intermediate and high rheostat according to the position of the shift link.

It is of major importance to correctly set the position of this device due to the widely different characteristics of the rheostats in the circuits.

6° GENERATOR-BATTERY SWITCH

This generator-battery switch or change over lever operated by hand, is located under the instrument panel and has three distinct positions :
- Operation with generator
- Cut-off
- Operation with battery.

The switch controls current supply to the clutch from either sources used or permits cutting off completely the clutch from both sources of current. The second circuit, with operation from battery, supplies current to an indicator lamp at the instrument panel.

OPERATION OF VEHICLE AND DRIVING TECHNIQUE

1° GENERAL

PLATE 1

The FERLEC electromagnetic clutch is designed for a D.C. 6 volt current. This voltage is supplied either by the generator **(17)** *(PLATE 8)* or by the battery **(4)** *(PLATE 8)*, selection being through the switch or change over lever **(6)** *(PLATE 8)* at instrument panel.

When current is supplied to the coil **(3)** in the mechanism head **(1)**, the carrier **(5)** is moved towards the head and the pressure plate **(13)** forces the friction unit against the intermediate plate **(6)**. The clutch is then applied.

If the flow of current is interrupted, the carrier **(5)** is no longer attracted and is moved away fron the head **(1)** through return springs **(16)** *(PLATE 4)*: The friction unit is cleared and the clutch is now released.

Operation of vehicle is easier due to the fact that the clutch pedal is eliminated *(PLATE 14)*. Progressive clutch action is achieved by direct use of generator [(current output curve *(PLATE 9)*] and by the FERLEC case rheostats. The clutch release and clutch application functions upon gear shifting are carried out by the gear shift lever. When idling, clutch release is automatic which permits a gear to be engaged when at a standstill and to stop the vehicle while leaving the gear engaged.

Due to the fact that the clutch mechanical control is eliminated, the clutch bearing has also been eliminated and this does away with reactions on crankshaft when releasing the clutch.

IMPORTANT : The engine idling speed of vehicles equipped with a FERLEC clutch should be set very accurately to 500 RPM.

2° OPERATION WITH GENERATOR

Clutch applied

PLATE 5.

The current from the generator **(17)** is drawn at the "generator" ("DYNAMO") terminal of regulator **(15)** and its flow is as follows :

Regulator **(15)**, underload - reversing switch terminal **(14)** { Low and Reverse Rheostat **(8)** / Intermediate and High Rheostat **(11)** } Clutch**(5)**

When idling, in view of the total circuit resistance, the current supplied by the generator **(17)** is too low to ensure clutch application. One gear being engaged (either low or reverse gear), accelerating causes engine RPM to increase thereby resulting in a higher generator output and simultaneously progressively eliminating the rheostat resistance in the circuit. Where both operations overlap each other, the carrier is forced more and more towards the head, this accounting for a progressive action which can be made just as fast as desired.

The procedure is identical with the intermediate and high circuit; however, the clutch application is faster when shifting from low to intermediate or from low to reverse due to lower rheostat resistances.

OPERATION OF VEHICLE AND DRIVING TECHNIQUE (Continued)

Clutch released

PLATE 6

While the current flow at idling speed through the clutch is very small, or practically nil, this current flow, under normal operating conditions, increases and it is no longer possible to shift gears. To this end, the relay **(1)** controlled from gear shift lever **(13)** permits interrupting the circuit during gear shifting and the clutch is thereby released.

This clutch releasing from the gear shift lever **(13)** which is not required for gear shifting when idling, becomes a must for up or downshifting.

Clutch release when slowing down or with vehicle at a standstill is automatic as soon as engine and consequently the generator have reached a RPM close to the idling RPM , Here again, a progressively clutch release action is achieved as the engine RPM decreases.

Resistance values at the successive stages of the rheostat have been determined in order that :

A) The torque transmission from the clutch be very low, in low and reverse gears under a slight acceleration, the driving effect being then almost nil which factor makes for very easy manoeuvring in a reduced space.

B) The torque transmission, as controlled by the intermediate and high rheostat, be, at the most, equal to the adherence value of the driving wheels on the ground to avoid wheel slipping and reduce tyre wear.

Thus, the clutch operates as a standard clutch when the engine is driving the propeller shaft and as an overload clutch for precisely determined values, varying with ratios, when the propeller shaft is driving. The system for operation with the generator is complemented with a resistance periodically adjustable to friction unit wear which warrants that the above characteristics be retained.

As there is automatic clutch release when idling, the clutch is also released when engine is stopped.

3° OPERATION WITH BATTERY

PLATE 7

The durrent output from the battery **(4)** is drawn at the battery terminal of the regulator. Current flow is the following :

Regulator **(15)**, battery terminal { Parking resistance **(7)** / Short circuiting switch **(10)** } Generator-battery switch **(6)**. . Clutch **(5)**

OPERATION OF VEHICLE AND DRIVING TECHNIQUE (Continued)

This peculiar use of the clutch current supply is made upon the 3 following conditions only :

A) When starter drive is not operating :

The generator-battery switch or change-over lever **(6)** on instrument panel is moved to the intermediate position and gear shift lever is moved to the selected speed, preferably to intermediate. With vehicle towed or pushed, and ignition on, the switch **(6)** is moved to the left, to the "battery" position, as soon as enough speed has been picked up.

The clutch is then under current and drives the engine which may now be started.

B) Whenever one or several units of the generator current supply circuit has been damaged or is not operating properly :

For starting, depress accelerator pedal slightly and apply clutch by moving switch to the left at the "battery" position. Leave switch to this position while driving.

Clutch application is still relatively smooth due to the resistance **(7)**, the so-called "parking" resistance being eliminated threughtits short circuiting switch **(10)** during acceleration.

For shifting gears, release clutch by moving generator-battery switch back to intermediate position, then shift to the desired speed, and move switch back to the left again.

To stop the vehicle, apply the brakes and release the clutch with the switch.

C) To stop vehicle on a hill or grade for a relatively short period of time :

Stop the car, stop the engine, shift to the correct speed (slow or reverse), move switch **(6)** to battery position, the engine is coupled and halts the vehicle by piston compression.

The parking resistance **(7)** is in operation, its purpose being to limit the current drawn by the clutch in order not to discharge battery too rapidly. This will be explained by the fact that the clamping of the clutch just needs to be proportioned to the resisting torque developed normally by the engine to maintain the vehicle at a standstill.

When the generator-battery switch **(6)** is moved to the "battery" position for either of the three above conditions, the red indicator lamp **(16)** on the instrument panel will flash on. Intensity of illumination of the lamp will be maximum when the accelerator controls the short-circuiting switch **(10)**. This permits checking, while driving in "emergency" conditions, that the parking resistance is correctly eliminated.

INSPECTION OF MECHANISM

- Check parts for cleanliness, more particularly the plates pressure areas (it is recommended to clean same with trichloroethylen;
- Check driving lugs **(15)** *(PLATE 4)* for proper condition;
- Check carrier return springs **(16)** *(PLATE 4)* for proper condition and eventual binding.

PART TO BE INSPECTED	TOOLS	OPERATION	FINDINGS	PART CONDITION IS	CORRECTION
Intermediate plate	Dial indicator. *(PLATE 20, FIG.1)*	Check warp on engine.	.04 mm (.0016") or over Under .0016"	Poor Correct	Poor bearing on crankshaft (clean) Change.
	Rule. *(PLATE 20, FIG.3)*	Check taper	Under .04 mm (.0016") Over .04 mm (.0016")	Correct Poor	Change mechanism
Pressure plate	Rule *(PLATE 20, FIG.2)*	Check taper	Under .04 mm (.0016") Over .04 mm (.0016")	Correct Poor	Change mechanism
Head and clutch coil	6 volt battery - wires and clamps 1/10 A ammeter *(PLATE 25)*	Check current drawn by coil.	From 4.5 to 5 Amperes 0 or over 5	Correct Short circuiting or cut (poor grounding)	Change mechanism

INSPECTION OF FRICTION UNIT

- Appearance of friction unit - Check for indications (spots or areas) of overheating;
- Flexibility of wear compensating plates **(15)** *(PLATE 4)*;
- Check friction sectors for cleanliness, grease. Clean with trichloroethylen;
- Check friction sector for uniform thickness *(PLATE 18, FIG.2)*;
- Check friction unit for warped condition *(PLATE 18, FIG.1)*; Eventually, straighten *(PLATE 19)*. *(REFER TO TABLE OF DIMENSIONS, ADJUSTMENTS AND TOLERANCES)*.

If wear is too extensive, if sectors are buckled or their surface damaged, if wear compensating plates are warped, worn or have been overheated, change the friction unit.

INSPECTION OF CURRENT SUPPLY SYSTEM

1° BRUSHES

PLATE 17

- Check that brush is neither broken nor excessively worn. If so, change brush.
- Check that shunt is not broken or damaged, that soldering on brush and spring guide to clip assembly are correct; if not, change brush.
- Check length of brush *(REFER TO TABLE OF DIMENSIONS, ADJUSTMENTS AND TOLERANCES)*.
- Check that brush properly slides in tube.

2° BRUSH HOLDER

PLATE 17

- Check brush holders position with reference to current receiving rings *(SEE TABLE OF DIMENSIONS, ADJUSTMENTS AND TOLERANCES)*
- If brush holder is dirty, remove and clean, preferably with trichloroethylen.

INSPECTION OF THE FERLEC CASE AND LINKAGE

- Clean the rheostat collector with alcohol [(8) and (11) *(PLATE 12)*]
- Check rheostat brushes for condition and correct bearing;
- Check soldered connections for failure. If necessary, resolder connection by reference to the case wiring diagram;
- Check resistance clamps for looseness. If necessary, retighten and check setting of resistances;
- Check rheostat shaft for seizing or binding or excessive play;
- Check linkage for proper operation and see that it does not check the accelerator normal travel *(PLATE 10)*

PART TO BE INSPECTED	TOOLS	OPERATION	FINDINGS	PART CONDITION IS	CORRECTION
Operating resistances. Parking resistances.	Voltmeter (1/10 V) Ammeter (1/10 A) 6 volt power source. Rheostat.	Connect to resistance terminals as per sketch *(PLATE 25)* recommended current : . 1 AMP max. current 5 AMP	Within tolerance limits Out of tolerance *(SEE TABLE OF DIMENSIONS, ADJUSTMENTS & TOLERANCES).*	Correct Poor setting	Set resistance to correct value
Adjustable resistance	Same tools	Same operation *(PLATE 25)*	Value according to setting.		
Parasitic or contact resistances.	Same tools	Connect to outer case terminals 1-6 or 7-6. Deduct above values, i.e. operating resistance and adjustable resistance *(PLATE 12)*	No difference Difference	No parasitic resistances Parasitic resistances	Locate these resistances at contacts. If not possible change case.
Relay	6 volt power source. Ammeter - or lamp	Excite relay at outer terminals 2-3. Supply current at terminals 1-6 or 6-7 with ammeter, with rheostat on neutral terminal (R. maximum) *(PLATE 26-FIG.1)*	Blade operates Blade does not operate (ammeter is permanently off or lamp flashes on)	Correct Relay is cut off Supply leads are cut off	Change case Change case.
Parking resistance short circuit switch	6 volt power source Pilot lamp *(PLATE 26 - FIG.2)*	Connect pilot lamp to 4 or 5 terminal and supply with current. Operate rheostat lever. Check point of operation *(SEE TABLE OF DIMENSIONS, ADJUSTMENTS AND TOLERANCES)*	Operates Does not operate or poor operation Correct Poor	Correct Poor Correct Poor setting	Change case Set position of switch

INSPECTION OF GEAR SHIFT LEVER

PLATE 13

- Check bushing **(5)** for proper position;
- Check lever for free operation and that it resumes its rest position;
- Check spring **(4)** for condition; if pitted or distorted, change lever;
- Check stationary contact pin for condition; if damaged change lever assembly;
- Check the through-floor terminal clip and the crimping; if damaged, change lever.

PART TO BE INSPECTED.	TOOLS	OPERATION	FINDINGS	PART CONDITION	CORRECTION
Lever assembly	Pilot lamp 6 volts power source. Rheostat (current flow through rheostat should not exceed .5 AMP.).	Connect pilot lamp and battery between ground and terminal. Operate lever by rotating it 1/5 turn after each operation.	Pilot lamp flashes on normally at the 5 positions. Lamp never flashes on. Erratic operation	Correct Lead is cut Spring damaged or distorted. Pin distorted or damaged.	Change lever. Change spring; if trouble is not over, change lever Change lever.
Through-floor rubber insulator bushing			Damaged.		Change rubber bushing

INSPECTION OF UNDERLOAD-REVERSING SWITCH

PLATE 15

- Disconnect wiring, supply current successively to each circuit with pilot lamp and 6 volt power source.
- Operate gear shift lever. Pilot lamp should flash on, or off according to gear shifted to.
- If lamp stays on or off or if its operation is erratic, change underload-reversing switch.

INSPECTION OF GENERATOR-BATTERY SWITCH

PLATE 14

- Disconnect wiring and supply current successively to each terminal with pilot lamp and 6 volt power source.
- Lamp should flash on for switch position corresponding to terminal whereto power is supplied. If not, change switch.

INSPECTION OF TELL-TALE LAMP (or indicator lamp)

PLATE 8 - Ref.16

- Check operation of lamp by moving switch (6) to "battery" position;
- If lamp does not flash on, check if lamp is in good condition and if connection is correct; if not, check switch itself.

INSPECTION OF WIRING HARNESS

- Disconnect wire to be inspected and check if wire is not cut with a pilot lamp and a 6 volt power source;
- Disconnect wire to be inspected and check for wire not being grounded, with a pilot lamp and a 6 volt power source;
- Disconnect wires to be inspected and check for short circuits with a pilot lamp and a 6 volt power source;

If trouble is located and found of small importance, repair and re-insulate; if trouble is too extensive, change wiring harness.

CAUSES OF MOST FREQUENT TROUBLES

TROUBLE	CAUSE	CORRECTION
Complete or extensive slipping.	Overheating due to wrong driving technique on a heavy grade and under full load	Allow to cool and improve on driving technique.
	Clutch current supply brushes are worn or jammed	Check brushes and correct trouble
Slipping in 2nd - 3rd gear	Underload reversing switch stays permanently at low and reverse position	Set or change underload-switch *(SEE PAGES 40 AND 41)*
Rough clutch application in low reverse gear	Underload-reversing switch stays permanently at low and reverse position.	Set or change underload-switch *(SEE, PAGES 40 AND 41)*
Variable slipping at "generator" position	Loosened generator belt	Tighten belt
	Parasitic resistances in system	Systematically look for the trouble
	Rheostat control is not properly set	Check and set control *(SEE PAGE 36)*
No clutch application at "generator" position	Flow of current is cut off somewhere in system	Systematically look for the trouble
	Gear shift lever is damaged	Repair or change lever *(SEE PAGES 38, 39 AND 40)*
No clutch release or poor clutch release.	Gear shift lever is damaged	Repair or change lever *(SEE PAGES 38, 39 AND 40)*
	Relay is defective	Change the FERLEC case *(SEE PAGE 35)*
Clutch driven at idling speed	Idling RPM is too high	Adjust idle
	Poor mechanical operation of clutch	Check mechanism and friction unit *(SEE PAGES 28 AND 32)*

CAUSES OF MOST FREQUENT TROUBLES (continued)

TROUBLE	CAUSE	CORRECTION
Lack of progressive action	Adjustable resistance insufficient	Set adjustable resistance *(SEE PAGE 35)*
	Friction unit worn - Adjustable resistance to maximum value.	Remove airgap adjusting shims and set the adjustable resistance *(SEE PAGES 28 AND 35)*
Chatter of varying importance	Poor surface condition of mechanism friction plate	Change mechanism *(SEE PAGE 28)*
	Greasy friction surfaces	Clean
	Friction unit is distorted or greasy	Straighten, change or clean *(SEE PAGE 17)*
No or insufficient engine braking	Poor operation of underload-reversing switch	Check and set or change the underload-reversing switch *(SEE PAGES 40 AND 41)*
	Major parasitic resistances in system	Systematically look for trouble
Clutch abnormally noisy	Failure of column clips due to fatigue	Change clips *(SEE PAGE 31)*
	Failure of driving lugs	Change mechanism *(SEE PAGE 28)*

SYSTEMATIC TROUBLE LOCATION

Generator is O.K.
Drive belt is tight
Battery is charged

Clutch slipping

Gen.-Bat. switch only at generator position

Trouble located at :

- Underload-reversing switch
- Gen. Bat. switch
- Ferlec case
- Wiring harness

Check :

- Underload reversing switch operation
- Gen. Bat. switch contact points condition
- Underload reversing switch condition
- Ferlec case connections
- Rheostat brush-terminal contact condition
- Rheostat revolving contact
- Operating resistances clamps tightening
- Adjustable resistance clamps tightening
- Operating resistances values
- Adjustable resistance for too high setting
- Relay contact points condition
- Connections to gen.-bat. switch
- No grounding of wiring harness

Switch at battery or generator position

Trouble located at :

- Gen.Bat. switch
- Brush (current supply)
- Ferlec case
- Wiring harness
- Clutch

Check :

- Gen. Bat. switch connections
- Gen. Bat. switch contact points condition
- Current supply brushes proper bearing
- Brushes binding in tubes
- Brush shunt condition
- Brush lengths
- Parking resistance short circuiting switch operation
- No grounding of wiring harness
- Intensity absorbed by clutch only (4.5 to 5 AMPS)
- Clutch friction surfaces cleanliness (free of lubricating materials)
- Head to carrier air gap (not to be nil)

SYSTEMATIC TROUBLE LOCATION (Continued)

Clutch fully released, permanently

Gen.-Bat. switch only at generator position

Trouble located at :

- Gear shift lever
- Generator
- Underload-reversing switch
- FERLEC case
- Polarity switch
- Wiring harness
- Regulator

Check :

- Gear shift lever operation (ground)
- Generator belt tension
- Generator for proper electrical operation
- Underload reversing switch operation
- FERLEC case *(see under "Slipping")*
- Relay operation in FERLEC case
- Gen. Bat. switch *(see under "Slipping")*
- No proper grounding at wiring harness
- No open circuit at wiring harness
- Regulator for proper operation

Switch at battery or generator position

Trouble located at :

- Gen.-Bat. switch *(See under "slipping"*
- Current supply brushes
- Ferlec case
- Wiring harness
- Clutch

Check :

- Gen.Bat.switch *(see under "Slipping"*
- Positive (+) brush binding (not bearing on current receiving ring)
- Positive brush holder grounding
- Positive ring and clutch coil connection
- FERLEC case connections
- Proper grounding at wiring harness
- Open circuit at wiring harness
- Open circuit at clutch coil

SYSTEMATIC TROUBLE LOCATION (Continued)

Poor clutch release action

- Correct clutch release when shifting gears
- Clutch driven at idling speed

Check for :

- Idling speed adjusted at 500 RPM
- Proper operation of voltage regulator

- Correct clutch release when idling
- Hard or impossible gear shifting

Check for :

- Proper operation of relay
- Correct location of gear shift lever bushing
- Distortion of lever contact spring
- Open relay/gear shift lever circuit
- Interruption of current flow to relay
- Short circuit at condenser

Hard or impossible gear shifting
Clutch driven at idling speed

Check for :

- Carrier releases freely (return springs)
- Clutch components do not bind
- Friction unit is not distorted
- Friction unit slides freely on gear box shaft

SYSTEMATIC TROUBLE LOCATION (Continued)

Erratic clutch release

- On rough roads

Check :

- Gear lever bushing for proper tightening
- Lever for wear (at ball joint)
- Spring for distortion
- Circuit for intermittent open circuit
- Circuit for intermittent grounding

- Rough clutch application

- Friction unit is worn out, adjust wear resistance or remove shims
- Clean generator collector and check brushes
- Underload-reversing switch stays at intermediate and high position.

- At given engine RPM's

Check :

- Relay blade for vibrations
- Circuit for intermittent grounding
- Circuit or clutch coil for intermittent open circuit

- No engine braking action

- In intermediate gear, with underload reversing switch in low and reverse position, high circuit resistance over-restricting current flow in clutch.

REPAIR OPERATIONS

510-1

*OPERATION : **ADJUSTING THE MECHANISM AIR GAP***

		TOOLS	REMARKS
	This operation is to be performed with vehicle raised on a hoist	. . . . .	*(PLATE 23)*
1	Remove the 3 screws at parking brake control bracket and allow bracket to hang loosely from the cables		
2	Check air gap at 3 locations and at pressure plate attaching lugs, using a set of thickness gauges inserted in between head **(1)** and carrier **(5)**.	. . . . .	*(PLATE 1)*
	With the clutch excited, the thickness gauges should have a close fit *(SEE TABLE OF DIMENSIONS, ADJUSTMENTS AND TOLERANCES)*	set of gauges	
3	Back off (2 turns) the pressure plate to carrier 6 attaching bolts	12mm ring spanner	
4	Remove shim or shims under pressure plate lugs (Holes are provided at corners for easy removal)		
5	Retighten the 6 carrier to pressure plate bolts . .	12mm ring spanner	
6	Check as outlined above the air gap with a set of thickness gauges, repeating the measurement at 3 spots, 120 degrees apart *(SEE TO TABLE OF DIMENSIONS ADJUSTMENTS AND TOLERANCES.*		
7	Reassemble the parking brake control bracket.		

*OPERATION : **REMOVING AND REFITTING THE MECHANISM***

	REMOVING		
1	Remove the driving system assembly plus the following :		
	- Disconnect the positive brush connection lead . . .	. . . . .	*(PLATE 16)*
	- Disconnect the ignition coil to relay current supply connection lead.		
	- Remove the FERLEC case with linkage and connections	. . . . .	*(PLATE 10)*
2	Remove radiator.		

OPERATION : ***REMOVING AND REFITTING THE MECHANISM*** (continued)

		TOOLS	REMARKS
3	Disassemble the engine unit from the power train assy (gear box and rear axle)		
4	Install engine unit on a cradle		
5	Remove oil sump		
6	Remove positive and ground brushes	. . . . .	*(PLATE 16)*
7	Remove the positive and ground brush holders . . .	23mm flat spanner	
8	Disconnect shunt connecting the positive ring to head coil.	9mm flat spanner	
9	Remove the 6 pressure plate to carrier assembly bolts.	12mm flat spanner	*(PLATE 1)*
10	Remove the pressure plate. Save the shims (1) if any (note location of shims)	. . . . .	*(PLATE 24)*
11	Remove friction unit	. . . . .	*(PLATE 1)*
12	Clear the nut retainers on the 4 crankshaft to mechanism bolts		
13	Remove the 4 crankshaft to mechanism bolts	14mm flat spanner	
14	Mark location of mechanism as to crankshaft (2 possible locations)		
15	Remove mechanism, clearing the two alignment pins.		
	REFITTING :		
1	Make sure that bearing faces on mechanism and on crankshaft are perfectly clean. Clean with trichloroethylen		
2	Refit the mechanism, checking for proper location with reference to crankshaft as marked upon dismantling.		
3	Assemble nut retainers (use new retainers) and run up the 4 crankshaft to mechanism assembly bolts. Check intermediate plate for distortion or warp. *(SEE TABLE OF DIMENSIONS, ADJUSTMENTS AND TOLERANCES)*	14mm torque wrench dial indicator	*(PLATE 21, FIG. 1)*
4	Hammer down the 4 assembly bolts retainers.		

OPERATION : ***REMOVING AND REFITTING THE MECHANISM*** (continued)

		TOOLS	REMARKS
5	Locate friction unit with wear compensating plates turned outward. Align friction unit by means of special centering tool	Clutch disc alignment tool Emb 02	*(PLATE 22, FIG.1)*
6	Locate pressure plate and locate connecting shunt		
7	Run up (minus two turns) the 6 pressure plate to carrier bolts. Prior, assemble the lockwashers . .	12mm flat spanner	
8	Install the adjusting shims (1) if any, under the pressure plate lugs.		*(PLATE 24)*
9	Tighten up the 6 bolts	12mm torque wrench	
10	Connect shunt from positive ring to clutch head coil. Install the special nut retainer under the nut.	10mm flat spanner	
11	Hammer down the nut retainer and apply coat of varnish to contact assembly.	"LUCANOL AM 2664" varnish(St Gobain)	
12	Refit the positive and ground brush holders. . . .	23mm flat spanner	
13	Refit the positive and ground brushes		
14	Excite the clutch while checking for correct air gap. Check that friction unit is cleared with clutch released and that brush holders are correctly located with reference to current receiving rings.	6 volt battery and jumper wires	*(PLATE 22, FIG.2).*
15	Excite clutch and remove the clutch disc alignment tool	6 volt battery and jumper wires	
16	Assemble the engine unit to the gear box and rear axle assembly by gently pressing-in the gear box shaft into the friction unit hub so as to prevent friction unit distortions. Assemble oil sump.		

*OPERATION : **REMOVING AND REFITTING THE MECHANISM*** (continued)

		TOOLS	REMARKS
17	Rotate assembly over by hand a few times to make sure nothing impedes the free rotation of the clutch after assembly of the engine unit to gear-box rear axle.		
18	Refit the radiator		
19	Refit the driving system assembly with additional operations as outlined above under the heading : Removing.		

*OPERATION : **DISMANTLING AND RE-ASSEMBLING THE MECHANISM***

	The only dismantling operation tolerated by the manufacturer is the dismantling of the pressure plate **(13)**	. . . . .	*(PLATE 4)*

*OPERATION : **OVERHAULING THE MECHANISM***

	Due to the fact that the mechanism has been balanced as an assembly it is impossible to modify or repair one component without disturbing the mechanism balance. Therefore, the overhauling operations are limited to the following : Cleaning the plates with trichloroethylen. Cleaning the current receiving rings **(10)** and **(12)** at pressure plate with alcohol	. . . . .	*(PLATE 1)*

OPERATION : ***OVERHAULING THE MECHANISM*** (continued)

	TOOLS	REMARKS
Changing : Pressure plate to carrier assembly bolts Lockwashers Column clips Column thrust washers Coil connection terminal nut retainer support Shunt connection nut at terminal **Caution :** We strongly disapprove of any repair operations on intermediate and pressure plates. Whenever these components are damaged, we recommend changing the mechanism assembly.		

OPERATION : ***ADJUSTING THE FRICTION UNIT***

No adjusting operations are actually permissible on the friction unit. Only checking operations and eventually, the straightening operation (for warp correction) may be performed on the latter.	. . . . .	*SEE PAGE 17*

OPERATION : ***OVERHAULING THE FRICTION UNIT***

Any damaged friction unit should be changed integrally. The straightening operation may only be made where a slight distortion or warp only is concerned	Friction unit support Emb.06. Friction sectors straightening fork Emb.08	*(PLATES 18 AND 19)*

OPERATION : ***ADJUSTMENT OF CURRENT SUPPLY BRUSH HOLDERS***

		TOOLS	REMARKS
	Location and direction of brush holders is conditioned at the manufacturing stage by the drilling and tapping operations on the engine unit. Uncorrect location is therefore due to a distortion of the brush holder body and the latter should be changed (See under : Removing and Refitting Brush Holders) *(REFER TO TABLE OF DIMENSIONS, ADJUSTMENTS AND TOLERANCES)*	. . . . .	*(PLATE 17)*

OPERATION : ***REMOVING AND REFITTING THE BRUSH HOLDERS***

	It is assumed that the brushes are removed.	. . . . .	*SEE PAGE 34*
	REMOVING		
1	Back off and remove the positive and ground brush holders	23mm flat spanner	
	REFITTING		
1	Install and assemble the positive and ground brush holders. Tighten up	23mm flat spanner	
2	Check direction and distances with respect to current receiving rings. . . . . *(SEE TO TABLE OF DIMENSIONS, ADJUSTMENTS AND TOLERANCES).*	. . . . .	*(PLATE 17)*

OPERATION : ***DISMANTLING, RE-ASSEMBLING THE BRUSH HOLDERS***

	The brush holders are not to be disassembled. The knurled plugs only can be removed temporarily for installing the brushes. Any damaged brush holder should be changed as an assembly. No reconditioning operation is permissible		

		TOOLS	REMARKS
	*OPERATION : **ADJUSTMENT OF THE CURRENT SUPPLY BRUSHES***		
	No adjustments are permissible on the current supply brushes. If worn *(REFER TO TABLE OF DIMENSIONS, ADJUSTMENTS AND TOLERANCES)* change brushes. No dismantling or reconditioning operations can be performed.		
	*OPERATION : **REMOVING AND REFITTING THE CURRENT SUPPLY BRUSHES***		
	REMOVING THE POSITIVE (+) BRUSH :		
1	Disconnect the positive lead		
2	Remove the knurled plug	. . . . .	*(PLATES 16 AND 17)*
3	Remove the insulator ring		
4	Pull out the complete brush assembly		
	REMOVING THE "GROUND" BRUSH		
1	Remove the knurled plug		
2	Pull out the complete brush assembly		
	REFITTING THE POSITIVE BRUSH :		
1	Install brush in tube, making sure that brush slides freely in tube.		
2	Install insulator ring over connection clip	. . . . .	*(PLATES 16 AND 17)*
3	Slide knurled plug over insulator ring and run up (tighten moderately)		
4	Reconnect the positive lead.		
	REFITTING THE "GROUND" BRUSH :		
1	Insert brush into tube making sure the brush slides freely.		
2	Install knurled plug over connection clip and tighten securely. The plug is provided for grounding the brush.		

*OPERATION : **ADJUSTMENTS TO THE FERLEC CASE***

		TOOLS	REMARKS
1	Adjust the adjusting resistance **(12)** the purpose of which is to compensate for wear of the friction unit and for the reduced air gap resulting therefrom		*(PLATE 12, FIG.1)*
	Increase the resistance by moving the sliding clamp up to the point where the desired manoeuvrability is obtained. Increase the resistance gradually by very small increments whereby the vehicle should be tested each time for operation	Screwdriver	
2	The position of the short circuiting underload switch **(10)** of the parking resistance **(7)** may be made to vary. Its position is adjusted at the works initially, and should be corrected only when disturbed accidentally.		*(PLATE 12)*
	(SEE TABLE OF DIMENSIONS, ADJUSTMENTS AND TOLERANCES)		

*OPERATION : **REMOVING, REFITTING THE FERLEC CASE***

	REMOVING		
1	Disconnect the 7 wire harness connection clips. These connections have color code marks on the harness with corresponding figures on the FERLEC case		*(PLATE 11)*
2	Disconnect the linkage by loosening the ball-joint cage **(2)** at rheostat lever side.	Pliers	*(PLATE 10)*
3	Remove the 2 lower bolts for mounting unto body. Save rubber mounting pads.	10mm flat spanner	
4	Remove the upper bolt for mounting unto body. Save rubber mounting pad	10mm flat spanner	
5	Remove case		
	REFITTING		
1	Position case on support		
2	Install upper bolt, inserting rubber pad in between case and support	10mm flat spanner	
3	Install the two lower bolts, inserting the rubber pads in between the case and its support	10mm flat spanner	
4	Tighten up the two bolts and the case attaching bolt	10mm flat spanner	
5	Connect the linkage to the case while assembling the ball-joint cage **(2)** to the rheostat lever		*(PLATE 10)*
6	Reassemble the wiring harness clip connections, attention being paid to color and figure marks.		*(PLATE 11)*

OPERATION : ***DISMANTLING, RE-ASSEMBLING THE FERLEC CASE***

		TOOLS	REMARKS
	DISMANTLING		
1	Remove the knurled nut attaching the cover		
2	Remove the cover		
3	Remove the gasket		
	The other case components are not supposed to be dismantled. When damaged, the whole case is to be changed.		
	RE-ASSEMBLING		
1	Install the gasket		
2	Install the cover, making sure that the gasket is properly installed		
3	Install and tighten the knurled cover attaching nut		

OPERATION : ***OVERHAULING THE FERLEC CASE***

	Overhauling operations are restricted to the setting of the resistances and the cleaning of the collector and of the whole of the case. Any reconditioning operation requiring the changing of a component of the case should automatically result in the replacing of the whole case.		

OPERATION : ***ADJUSTMENT OF THE FERLEC CASE CONTROL LINKAGE***

	Adjustment is through the length of the connecting link **(4)** from the linkage to the rheostat lever of the case. The adjustment should permit to position the rheostat brushes unto the collector with accelerator free *(SEE TABLE OF DIMENSIONS, ADJUSTMENTS AND TOLERANCES)*	. . . . .	*(PLATE 10)*
1	Clear one of the 2 ball joint cages **(2)** or **(6)**. . .	12mm flat spanner	
2	Back off the check nut **(3)** or **(5)**		
3	Loosen or tighten - according to condition found - the ball joint cage while positioning it for reassembly	screwdriver	
4	Tighten up the check nut **(3)** or **(5)**	12mm flat spanner	
5	Reassemble the ball joint cage		

OPERATION : ***REMOVING, REFITTING THE FERLEC CASE CONTROL LINKAGE***

		TOOLS	REMARKS
	REMOVING	. . . . .	*(PLATE 10)*
1	Clear the ball joint cage from the rheostat lever		
2	Compress the thrust spring on the coupling rod by pulling the latter towards the LH side of the vehicle, clear the carburetor pivot ball joint and driving lug		
3	Clear and remove the linkage. Salvage the thrust spring.		
	REFITTING		
1	Install the thrust spring into the coupling rod. .	. . . . .	*(PLATE 10)*
2	Install the pivot ball, body side, by compressing the thrust spring		
3	Locate and install the coupling rod in alignment opposite the carburetor pivot ball and simultaneously mount the driving lug.		
4	Hook on the ball joint cage on the rheostat lever		

OPERATION : ***DISMANTLING, RE-ASSEMBLING THE CASE CONTROL LINKAGE***

	DISMANTLING		
1	Clear the coupling rod ball joint cage from the rod	. . . . .	*(PLATE 10)*
2	Loosen the ball joint cages and the check nuts on the connection link.		
3	Drive the rubber bushing from the driving lever		
	RE-ASSEMBLING		
1	Reassemble the ball joint cages and the check nuts on the link.		
2	Hook on the link at the ball joint cage		
3	Install the rubber bushing into the driving lever hole.		

OPERATION : ***OVERHAULING THE CASE CONTROL LINKAGE***

		TOOLS	REMARKS
	Worn ball joints and cages should be changed The thrust spring at the coupling rod should be changed if sagging. If damaged, the driving lever rubber bushing should be changed. Do not omit reinstalling a bushing as failure to do so would result in excessive steering gear play; this would, in turn, cause the rheostat operation to be jeopardized with consequent poor operation of the clutch		

OPERATION : ***ADJUSTMENT OF THE GEAR SHIFT LEVER***

	Adjusting the gear shift lever bushing or sleeve **(5)** to proper location	. . . . .	*(PLATE 13)*
1	Remove the rubber cap		
2	Slacken the check nut **(6)**.	. 19mm flat spanner	
3	Tighten the sleeve **(5)** completely up, then back off by 1/2 turn so that the maximum movement of the lever be obtained in either the forward or reverse direction.	. 17mm flat spanner	
4	Hold sleeve **(5)** in this position and tighten up the check nut **(6)**.	. 17 and 19 mm flat spanners	
	Reinstall the cap.		

OPERATION : ***REMOVING, REFITTING THE GEAR SHIFT LEVER***

	REMOVING		
	Follow same procedure as with standard lever except for the additional operations :		
1	Disconnect the wiring harness connection clip		
2	Push back the through-floor connection terminal through its insulator.		

OPERATION : ***REMOVING, REFITTING THE GEAR SHIFT LEVER*** (continued)

		TOOLS	REMARKS
	REFITTING :		
1	Make a loop in the lever connection wire		
2	Push in the through-floor terminal through its insulator		
3	Connect the wiring harness connection clip. Refit as a standard lever		

OPERATION : ***DISMANTLING, RE-ASSEMBLING THE GEAR SHIFT LEVER***

	The above can be performed while the lever is on the car os is removed from the car. In the latter case, clamp the lower end in a vice, to facilitate the operation	. . . . .	*(PLATE 13)*
	DISMANTLING		
1	Lift up the rubber cap		
2	Loosen the check nut **(6)**.	19mm flat spanner	
3	Back off the sleeve **(5)** and remove the lever and sleeve assy **(2)**..	19mm flat spanner	
	Save the thrust washer **(3)**		
4	Remove the lever ball **(1)**		
5	Remove the rubber cap		
6	Remove the sleeve **(5)**		
7	Remove the contact spring **(4)** which **should** be changed.		
	RE-ASSEMBLING	. . . . .	*(PLATE 13)*
1	Install a new contact spring **(4)** and run up securely but gently		
	The spring should be correctly aligned with lever for proper assembly		
2	Install sleeve **(5)** on the lever		
3	Install rubber cap		
4	Run up the lever ball **(1)** on lever **(2)**		

		TOOLS	REMARKS
	*OPERATION : **DISMANTLING, RE-ASSEMBLING THE GEAR SHIFT LEVER*** (continued)		
5	In sleeve, install the thrust spring **(3)**		
6	Turn over and tighten up securely the sleeve **(5)** at lever end	17mm flat spanner	
7	Loosen the sleeve **(5)** taking care to locate it accurately and correctly		
8	Tighten up the check nut **(6)**	19mm spanner	
	The stationary contact and the connection wire with clip are not to be considered as removable.		
	*OPERATION : **OVERHAULING THE GEAR SHIFT LEVER***		
	Reconditioning operations on the gear shift lever will be restricted to the following :		*(PLATE 13)*
1	Changing the silver plated contact spring **(4)**		
2	Changing the rubber cap		
3	Changing the lever ball **(1)**		
	If any other damage or failure occur, the lever is to be changed		
	*OPERATION : **ADJUSTMENT OF THE UNDERLOAD-REVERSING SWITCH***		
	Adjusting operations on the underload-reversing switch concern only its position with reference to the gear control link.	. . . . .	*(PLATE 15)*
1	Remove the sheet metal control cover	10mm flat spanner	
2	Back off the support to floor attaching nuts . . .	10mm flat spanner	
3	Slide support to the left or to the right hand side of vehicle according to requirements.		
4	Slightly tighten the floor to support attaching nuts	10mm flat spanner	
5	Check underload-reversing switch for correct operation.		
6	Reinstall the sheet metal control cover.	10mm flat spanner	

*OPERATION : **REMOVING, REFITTING THE UNDERLOAD-REVERSING SWITCH***

		TOOLS	REMARKS
	REMOVING		
1	Remove the sheet metal control cover	. . . . .	*(PLATE 15)*
2	Disconnect the wiring harness connection clips		
3	Loosen and remove the 2 floor to support attaching nuts	10mm flat spanner	
	Remove the lockwashers		
4	Remove the underload-reversing switch complete with support.		
	REFITTING		
1	Position the switch unto the attaching screws		
2	Install the lockwashers and tighten up the attaching nuts	10mm flat spanner	
3	Set underload-reversing switch to proper location		
4	Tighten up the attaching nuts.	10mm flat spanner	
5	Reinstall the sheet metal control cover		

*OPERATION : **DISMANTLING, RE-ASSEMBLING THE UNDERLOAD-REVERSING SWITCH***

	The switch cannot be dismantled. Any device the dismantling of which proves necessary will be changed complete with support bracket.		

*OPERATION : **REMOVING, REFITTING THE GENERATOR-BATTERY SWITCH***

	REMOVING		
1	Disconnect the wiring harness connection clips		
2	Remove attaching nut at instrument panel	16mm flat spanner	
3	Remove the switch		
	REFITTING		
	Reverse sequence of above operations.		

		TOOLS	REMARKS
	*OPERATION : **DISMANTLING, RE-ASSEMBLING THE GENERATOR-BATTERY SWITCH***		
	This device cannot be dismantled. Any device, the dismantling of which proves necessary will be changed complete.		
	*OPERATION : **REMOVING, REFITTING THE TELL TALE LAMP***		
	REMOVING		
1	Remove the connection wire		
2	Remove the tell tale lamp nut at instrument panel	8mm flat spanner	
3	Remove the tell tale lamp		
	REFITTING		
1	Install the tell tale lamp into its location		
2	Position washer on lamp and tighten the attaching nut on the instrument panel (do not overtighten the nut in order not to overstress the screw) . . .	8mm flat spanner	
3	Connect the connection wire		
	*OPERATION : **DISMANTLING, RE-ASSEMBLING THE TELL TALE LAMP***		
	DISMANTLING		
1	Slide the cover off the tell tale lamp		
2	Remove the bulb		
	RE-ASSEMBLING		
1	Check for proper operation of bulb		
2	Install bulb		
3	Install the tell tale lamp cover		

		TOOLS	REMARKS
	*OPERATION : **OVERHAULING THE TELL TALE LAMP***		
	Overhauling operations on this item are restricted to changing the bulb. Any damaged device should be changed.		
	*OPERATION : **ADJUSTMENT OF THE WIRING HARNESS***		
	Adjust the wiring harness ends in order to achieve easy connections to prevent overloading or damaging same, especially the clip type connections.		
	*OPERATION : **REMOVING, REFITTING WIRING HARNESS***		
	REMOVING		
1	Disconnect all connections		
2	Free the wiring harness at all spots where it is secured to the body		
3	Remove the wiring harness		
	REFITTING		
1	Install and position the wiring harness		
2	Secure the harness to body at proper locations		
3	Make all connections		

*OPERATION : **OVERHAULING THE WIRING HARNESS***

		TOOLS	REMARKS
	Overhauling operations on the wiring should only be performed when only minor damages are concerned as :		
1	Change connection clips or cones		
2	Locally failed insulation		
3	Cut wire while providing for careful insulation		